Atlas Copco

Instruction Manual

User and maintenance manual
for lighting towers
English

QLT H40 Pd S2 APP | 403D-11G

Atlas Copco

QLT H40 Pd S2 APP

User and maintenance manual for lighting towers

Original instructions

Printed matter N°
2954 4960 03

07/2012

ATLAS COPCO - PORTABLE ENERGY DIVISION
www.atlascopco.com

Warranty and Liability Limitation

Use only authorized parts.
Any damage or malfunction caused by the use of unauthorized parts is not covered by Warranty or Product Liability.
The manufacturer does not accept any liability for any damage arising from modifications, additions or conversions made without the manufacturer's approval in writing.
Neglecting maintenance or making changes to the setup of the machine can result in major hazards, including fire risk.
While every effort has been made to ensure that the information in this manual is correct, Atlas Copco does not assume responsibility for possible errors.

Congratulations on the purchase of your QLT on-site lighting tower. It is a solid, safe and reliable machine, built according to the latest technology. Follow the instructions in this booklet and we guarantee you years of troublefree operation. Please read the following instructions carefully before starting to use your machine. While every effort has been made to ensure that the information in this manual is correct, Atlas Copco does not assume responsibility for possible errors. Atlas Copco reserves the right to make changes without prior notice.

Contents

1 Safety precautions

To be read attentively and acted accordingly before towing, lifting, operating, performing maintenance or repairing the lighting tower.

1.1 Introduction

The policy of Atlas Copco is to provide the users of their equipment with safe, reliable and efficient products. Factors taken into account are among others:

- the intended and predictable future use of the products, and the environments in which they are expected to operate,
- applicable rules, codes and regulations,
- the expected useful product life, assuming proper service and maintenance,
- providing the manual with up-to-date information.

Before handling any product, take time to read the relevant instruction manual. Besides giving detailed operating instructions, it also gives specific information about safety, preventive maintenance, etc.
Keep the manual always at the unit location, easy accessible to the operating personnel.

See also the safety precautions of the engine and possible other equipment, which are separately sent along or are mentioned on the equipment or parts of the unit.

These safety precautions are general and some statements will therefore not always apply to a particular unit.

Only people that have the right skills should be allowed to operate, adjust, perform maintenance or repair on Atlas Copco equipment. It is the responsibility of management to appoint operators with the appropriate training and skill for each category of job.

Skill level 1: Operator

An operator is trained in all aspects of operating the unit with the push-buttons, and is trained to know the safety aspects.

Skill level 2: Mechanical technician

A mechanical technician is trained to operate the unit the same as the operator. In addition, the mechanical technician is also trained to perform maintenance and repair, as described in the instruction manual, and is allowed to change settings of the control and safety system. A mechanical technician does not work on live electrical components.

Skill level 3: Electrical technician

An electrical technician is trained and has the same qualifications as both the operator and the mechanical technician. In addition, the electrical technician may carry out electrical repairs within the various enclosures of the unit. This includes work on live electrical components.

Skill level 4: Specialist from the manufacturer

This is a skilled specialist sent by the manufacturer or its agent to perform complex repairs or modifications to the equipment.

In general it is recommended that not more than two people operate the unit, more operators could lead to unsafe operating conditions. Take necessary steps to keep unauthorized persons away from the unit and eliminate all possible sources of danger at the unit.

When handling, operating, overhauling and/or performing maintenance or repair on Atlas Copco equipment, the mechanics are expected to use safe engineering practices and to observe all relevant local safety requirements and ordinances. The following list is a reminder of special safety directives and precautions mainly applicable to Atlas Copco equipment.

Neglecting the safety precautions may endanger people as well as environment and machinery:

- endanger people due to electrical, mechanical or chemical influences,
- endanger the environment due to leakage of oil, solvents or other substances,
- endanger the machinery due to function failures.

All responsibility for any damage or injury resulting from neglecting these precautions or by non-observance of ordinary caution and due care required in handling, operating, maintenance or repair, also if not expressly mentioned in this instruction manual, is disclaimed by Atlas Copco.

The manufacturer does not accept any liability for any damage arising from the use of non-original parts and for modifications, additions or conversions made without the manufacturer's approval in writing.

If any statement in this manual does not comply with local legislation, the stricter of the two shall be applied.

Statements in these safety precautions should not be interpreted as suggestions, recommendations or inducements that it should be used in violation of any applicable laws or regulations.

1.2 General safety precautions

1 The owner is responsible for maintaining the unit in a safe operating condition. Unit parts and accessories must be replaced if missing or unsuitable for safe operation.

2 The supervisor, or the responsible person, shall at all times make sure that all instructions regarding machinery and equipment operation and maintenance are strictly followed and that the machines with all accessories and safety devices, as well as the consuming devices, are in good repair, free of abnormal wear or abuse, and are not tampered with.

3 Whenever there is an indication or any suspicion that an internal part of a machine is overheated, the machine shall be stopped but no inspection covers shall be opened before sufficient cooling time has elapsed; this to avoid the risk of spontaneous ignition of oil vapour when air is admitted.

4 Normal ratings (pressures, temperatures, speeds, etc.) shall be durably marked.

5 Operate the unit only for the intended purpose and within its rated limits (pressure, temperature, speeds, etc.).

6 The machinery and equipment shall be kept clean, i.e. as free as possible from oil, dust or other deposits.

7 To prevent an increase in working temperature, inspect and clean heat transfer surfaces (cooler fins, intercoolers, water jackets, etc.) regularly. See the maintenance schedule.

8 All regulating and safety devices shall be maintained with due care to ensure that they function properly. They may not be put out of action.

9 Pressure and temperature gauges shall be checked regularly with regard to their accuracy. They shall be replaced whenever outside acceptable tolerances.

10 Safety devices shall be tested as described in the maintenance schedule of the instruction manual to determine that they are in good operating condition.

11 Mind the markings and information labels on the unit.

12 In the event the safety labels are damaged or destroyed, they must be replaced to ensure operator safety.

13 Keep the work area neat. Lack of order will increase the risk of accidents.

14 When working on the unit, wear safety clothing. Depending on the kind of activities these are: safety glasses, ear protection, safety helmet (including visor), safety gloves, protective clothing, safety shoes. Do not wear the hair long and loose (protect long hair with a hairnet), or wear loose clothing or jewellery.

15 Take precautions against fire. Handle fuel, oil and anti-freeze with care because they are inflammable substances. Do not smoke or approach with naked flame when handling such substances. Keep a fire-extinguisher in the vicinity.

16a **On-site lighting towers (with earthing pin):**

Earth the lighting tower as well as the load properly.

1.3 Safety during transport and installation

To lift a unit, all loose or pivoting parts, e.g. doors and towbar, shall first be securely fastened.

Do not attach cables, chains or ropes directly to the lifting eye; apply a crane hook or lifting shackle meeting local safety regulations. Never allow sharp bends in lifting cables, chains or ropes.

Helicopter lifting is not allowed.
It is strictly forbidden to dwell or stay in the risk zone under a lifted load. Never lift the unit over people or residential areas. Lifting acceleration and retardation shall be kept within safe limits.

1 Before towing the unit:
- check the towbar, the brake system and the towing eye. Also check the coupling of the towing vehicle,
- check the towing and brake capability of the towing vehicle,
- check that the towbar, jockey wheel or stand leg is safely locked in the raised position,
- ascertain that the towing eye can swivel freely on the hook,
- check that the wheels are secure and that the tyres are in good condition and inflated correctly,
- connect the signalisation cable, check all lights and connect the pneumatic brake couplers,
- attach the safety break-away cable or safety chain to the towing vehicle,
- remove wheel chocks, if applied, and disengage the parking brake.

2 To tow a unit use a towing vehicle of ample capacity. Refer to the documentation of the towing vehicle.

3 If a unit is to be backed up by a towing vehicle, disengage the overrun brake mechanism (if it is not an automatic mechanism).

4 In case of transporting a non-trailer unit on a truck, fasten it to the truck by attaching straps via fork lift holes, via the holes in the frame at the front and back or via the lifting beam. To prevent damage, never put straps on the roof surface of the unit.

5 Never exceed the maximum towing speed of the unit (mind the local regulations).

6 Place the unit on level ground and apply the parking brake before disconnecting the unit from the towing vehicle. Unclip the safety break-away cable or safety chain. If the unit has no parking brake or jockey wheel, immobilize the unit by placing chocks in front of and/or behind the wheels. When the towbar can be positioned vertically, the locking device must be applied and kept in good order.

7 To lift heavy parts, a hoist of ample capacity, tested and approved according to local safety regulations, shall be used.

8 Lifting hooks, eyes, shackles, etc., shall never be bent and shall only have stress in line with their design load axis. The capacity of a lifting device diminishes when the lifting force is applied at an angle to its load axis.

9 For maximum safety and efficiency of the lifting apparatus all lifting members shall be applied as near to perpendicular as possible. If required, a lifting beam shall be applied between hoist and load.

10 Never leave a load hanging on a hoist.

11 A hoist has to be installed in such a way that the object will be lifted perpendicular. If that is not possible, the necessary precautions must be taken to prevent load-swinging, e.g. by using two hoists, each at approximately the same angle not exceeding 30° from the vertical.

12 Locate the unit at least 1 meter away from walls. Take all precautions to ensure that hot air exhausted from the engine and driven machine cooling systems cannot be recirculated. If such hot air is taken in by the engine or driven machine cooling fan, this may cause overheating of the unit; if taken in for combustion, the engine power will be reduced.

13 Lighting towers shall be stalled on an even, solid floor, in a clean location with sufficient ventilation. If the floor is not level or can vary in inclination, consult Atlas Copco.

14 The electrical connections shall correspond to local codes. The machines shall be earthed and protected against short circuits by fuses or circuit breakers.

15 Never connect the lighting tower outlets to an installation which is also connected to a public mains.

16 Before connecting a load, switch off the corresponding circuit breaker, and check whether frequency, voltage, current and power factor comply with the ratings of the lighting tower.

17 Before transportation of the unit, switch off all the circuit breakers.

1.4 Safety during use and operation

1 When the unit has to operate in a fire-hazardous environment, each engine exhaust has to be provided with a spark arrestor to trap incendiary sparks.

2 The exhaust contains carbon monoxide which is a lethal gas. When the unit is used in a confined space, conduct the engine exhaust to the outside atmosphere by a pipe of sufficient diameter; do this in such a way that no extra back pressure is created for the engine. If necessary, install an extractor. Observe any existing local regulations.

Make sure that the unit has sufficient air intake for operation. If necessary, install extra air intake ducts.

3 When operating in a dust-laden atmosphere, place the unit so that dust is not carried towards it by the wind. Operation in clean surroundings considerably extends the intervals for cleaning the air intake filters and the cores of the coolers.

4 Never remove a filler cap of the cooling water system of a hot engine. Wait until the engine has sufficiently cooled down.

5 Never refill fuel while the unit is running, unless otherwise stated in the Atlas Copco Instruction Book (AIB). Keep fuel away from hot parts such as air outlet pipes or the engine exhaust. Do not smoke when fuelling. When fuelling from an automatic pump, an earthing cable should be connected to the unit to discharge static electricity. Never spill nor leave oil, fuel, coolant or cleansing agent in or around the unit.

6 All doors shall be shut during operation so as not to disturb the cooling air flow inside the bodywork and/or render the silencing less effective. A door should be kept open for a short period only e.g. for inspection or adjustment.

7 Periodically carry out maintenance works according to the maintenance schedule.

8 Stationary housing guards are provided on all rotating or reciprocating parts not otherwise protected and which may be hazardous to personnel. Machinery shall never be put into operation, when such guards have been removed, before the guards are securely reinstalled.

9 Noise, even at reasonable levels, can cause irritation and disturbance which, over a long period of time, may cause severe injuries to the nervous system of human beings.
When the sound pressure level, at any point where personnel normally has to attend, is:
- below 70 dB(A): no action needs to be taken,
- above 70 dB(A): noise-protective devices should be provided for people continuously being present in the room,
- below 85 dB(A): no action needs to be taken for occasional visitors staying a limited time only,
- above 85 dB(A): room to be classified as a noise-hazardous area and an obvious warning shall be placed permanently at each entrance to alert people entering the room, for even relatively short times, about the need to wear ear protectors,
- above 95 dB(A): the warning(s) at the entrance(s) shall be completed with the recommendation that also occasional visitors shall wear ear protectors,
- above 105 dB(A): special ear protectors that are adequate for this noise level and the spectral composition of the noise shall be provided and a special warning to that effect shall be placed at each entrance.

10 The unit has parts of which the temperature can be in exess of 80 °C (176 °F), and which may be accidentally touched by personnel when opening the machine during or just after operation. Insulation or safety guards protecting these parts shall not be removed before the parts have cooled down sufficiently, and must be re-installed before operating the machine. As it is not possible to insulate or protect all hot parts by guards (e.g. exhaust manifold, exhaust turbine), the operator / service engineer must always be aware not to touch hot parts when opening a machine door.

11 Never operate the unit in surroundings where there is a possibility of taking in flammable or toxic fumes.

12 If the working process produces fumes, dust or vibration hazards, etc., take the necessary steps to eliminate the risk of personnel injury.

13 When using compressed air or inert gas to clean down equipment, do so with caution and use the appropriate protection, at least safety glasses, for the operator as well as for any bystander. Do not apply compressed air or inert gas to your skin or direct an air or gas stream at people. Never use it to clean dirt from your clothes.

14 When washing parts in or with a cleaning solvent, provide the required ventilation and use appropriate protection such as a breathing filter, safety glasses, rubber apron and gloves, etc.

15 Safety shoes should be compulsory in any workshop and if there is a risk, however small, of falling objects, wearing of a safety helmet should be included.

16 If there is a risk of inhaling hazardous gases, fumes or dust, the respiratory organs must be protected and depending on the nature of the hazard, so must the eyes and skin.

17 Remember that where there is visible dust, the finer, invisible particles will almost certainly be present too; but the fact that no dust can be seen is not a reliable indication that dangerous, invisible dust is not present in the air.

18 Never operate the lighting tower in excess of its limits as indicated in the technical specifications and avoid long no-load sequences.

19 Never operate the lighting tower in a humid atmosphere. Excessive moisture causes worsening of the lighting tower insulation.

20 Do not open electrical cabinets, cubicles or other equipment while voltage is supplied. If such cannot be avoided, e.g. for measurements, tests or adjustments, have the action carried out by a qualified electrician only, with appropriate tools, and ascertain that the required bodily protection against electrical hazards is applied.

21 Never touch the power terminals during operation of the machine.

22 Whenever an abnormal condition arises, e.g. excessive vibration, noise, odour, etc., switch the circuit breakers to OFF and stop the engine. Correct the faulty condition before restarting.

23 Check the electric cables regularly. Damaged cables and insufficient tightening of connections may cause electric shocks. Whenever damaged wires or dangerous conditions are observed, switch the circuit breakers to OFF and stop the engine. Replace the damaged wires or correct the dangerous condition before restarting. Make sure that all electric connections are securely tightened.

24 Avoid overloading the lighting tower. The lighting tower is provided with circuit breakers for overload protection. When a breaker has tripped, reduce the concerned load before restarting.

25 If the lighting tower is used as stand-by for the mains supply, it must not be operated without control system which automatically disconnects the lighting tower from the mains when the mains supply is restored.

26 Never remove the cover of the output terminals during operation. Before connecting or disconnecting wires, switch off the load and the circuit breakers, stop the machine and make sure that the machine cannot be started inadvertently or there is any residual voltage on the power circuit.

27 Running the lighting tower at low load for long periods will reduce the lifetime of the engine.

28 When operating the lighting tower in Remote or Auto mode, observe all relevant local legislation.

29 When deploying the lighting tower mast, keep in mind following safety precautions:
- Do not deploy the mast unless the machine is standing on an even surface and the stabilizers have been fully adjusted.
- Do not deploy the mast in the vicinity of overhead power cables: DANGER OF ELECTROCUTION.
- Make sure that nobody is standing too close to the lighting tower when the mast is being deployed.
- Do not deploy the mast if the wind is stronger than 90 Km/h.

1.5 Safety during maintenance and repair

Maintenance, overhaul and repair work shall only be carried out by adequately trained personnel; if required, under supervision of someone qualified for the job.

1 Use only the correct tools for maintenance and repair work, and only tools which are in good condition.

2 Parts shall only be replaced by genuine Atlas Copco replacement parts.

3 All maintenance work, other than routine attention, shall only be undertaken when the unit is stopped. Steps shall be taken to prevent inadvertent starting. In addition, a warning sign bearing a legend such as "work in progress; do not start" shall be attached to the starting equipment.
On engine-driven units the battery shall be disconnected and removed or the terminals covered by insulating caps.
On electrically driven units the main switch shall be locked in open position and the fuses shall be taken out. A warning sign bearing a legend such as "work in progress; do not supply voltage" shall be attached to the fuse box or main switch.

4 Prior to stripping an engine or other machine or undertaking major overhaul on it, prevent all movable parts from rolling over or moving.

5 Make sure that no tools, loose parts or rags are left in or on the machine. Never leave rags or loose clothing near the engine air intake.

6 Never use flammable solvents for cleaning (fire-risk).

7 Take safety precautions against toxic vapours of cleaning liquids.

8 Never use machine parts as a climbing aid.

9 Observe scrupulous cleanliness during maintenance and repair. Keep away dirt, cover the parts and exposed openings with a clean cloth, paper or tape.

10 Never weld on or perform any operation involving heat near the fuel or oil systems. Fuel and oil tanks must be completely purged, e.g. by steam-cleaning, before carrying out such operations. Never weld on, or in any way modify, pressure vessels. Disconnect the alternator cables during arc welding on the unit.

11 Support the towbar and the axle(s) securely if working underneath the unit or when removing a wheel. Do not rely on jacks.

12 Do not remove any of, or tamper with, the sound-damping material. Keep the material free of dirt and liquids such as fuel, oil and cleansing agents. If any sound-damping material is damaged, replace it to prevent the sound pressure level from increasing.

13 Use only lubricating oils and greases recommended or approved by Atlas Copco or the machine manufacturer. Ascertain that the selected lubricants comply with all applicable safety regulations, especially with regard to explosion or fire-risk and the possibility of decomposition or generation of hazardous gases. Never mix synthetic with mineral oil.

14 Protect the engine, alternator, air intake filter, electrical and regulating components, etc., to prevent moisture ingress, e.g. when steam-cleaning.

15 When performing any operation involving heat, flames or sparks on a machine, the surrounding components shall first be screened with non-flammable material.

16 Never use a light source with open flame for inspecting the interior of a machine.

17 When repair has been completed, the machine shall be barred over at least one revolution for reciprocating machines, several revolutions for rotary ones to ensure that there is no mechanical interference within the machine or driver. Check the direction of rotation of electric motors when starting up the machine initially and after any alteration to the electrical connection(s) or switch gear, to check that the oil pump and the fan function properly.

18 Maintenance and repair work should be recorded in an operator's logbook for all machinery. Frequency and nature of repairs can reveal unsafe conditions.

19 When hot parts have to be handled, e.g. shrink fitting, special heat-resistant gloves shall be used and, if required, other body protection shall be applied.

20 When using cartridge type breathing filter equipment, ascertain that the correct type of cartridge is used and that its useful service life is not surpassed.

21 Make sure that oil, solvents and other substances likely to pollute the environment are properly disposed of.

22 Before clearing the lighting tower for use after maintenance or overhaul, submit it to a testrun, check that the AC power performance is correct and that the control and shutdown devices function correctly.

1.6 Tool applications safety

Apply the proper tool for each job. With the knowledge of correct tool use and knowing the limitations of tools, along with some common sense, many accidents can be prevented.

Special service tools are available for specific jobs and should be used when recommended. The use of these tools will save time and prevent damage to parts.

1.7 Battery safety precautions

When servicing batteries, always wear protecting clothing and glasses.

1 The electrolyte in batteries is a sulphuric acid solution which is fatal if it hits your eyes, and which can cause burns if it contacts your skin. Therefore, be careful when handling batteries, e.g. when checking the charge condition.

2 Install a sign prohibiting fire, open flame and smoking at the post where batteries are being charged.

3 When batteries are being charged, an explosive gas mixture forms in the cells and might escape through the vent holes in the plugs.
Thus an explosive atmosphere may form around the battery if ventilation is poor, and can remain in and around the battery for several hours after it has been charged. Therefore:
- never smoke near batteries being, or having recently been, charged,
- never break live circuits at battery terminals, because a spark usually occurs.

4 When connecting an auxiliary battery (AB) in parallel to the unit battery (CB) with booster cables: connect the + pole of AB to the + pole of CB, then connect the - pole of CB to the mass of the unit. Disconnect in the reverse order.

2 Main parts

2.1 General description

The lighting tower provides an undercarriage (frame, axle and towbar) and 4 spot lights of 1000 W each. The lighting tower is very useful for construction sites where no electricity nor lighting is available.

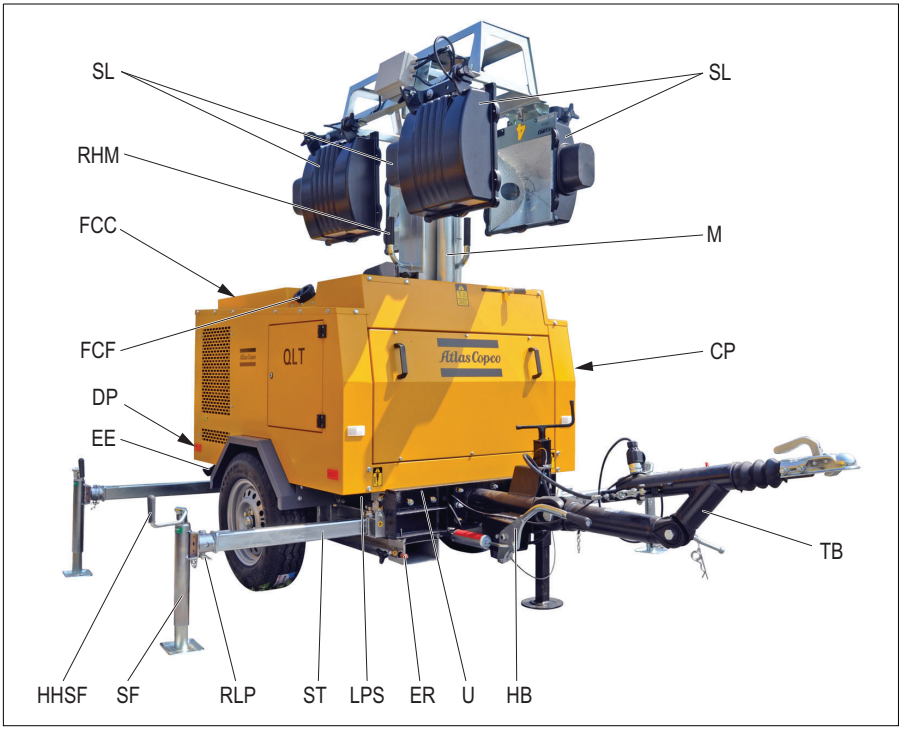

CP	Control panel
DP	Data plate
EE	Engine exhaust
ER	Earth rod
FCC	Filling cap coolant
FCF	Filling cap fuel
HB	Hand brake
HHSF	Handle to adjust the height of the supporting foot
LPS	Locking pin stabilizer
M	Mast
RHM	Rotating handles mast
RLP	Rotating locking pin supporting foot
SF	Supporting foot
SL	Spotlights
ST	Stabilizer
TB	Towbar
U	Undercarriage

2.2 Markings

A brief description of all markings provided on the lighting tower is given hereafter.

Indicates that this manual should be read carefully before putting the machine into use.

Instruction book label.

Indicates that an electric voltage, dangerous to life, is present. Never touch the electric terminals during operation.

Indicates that the mast should not be extended near electric wires.

Indicates the lifting point of the lighting tower.

Indicates the forklift slots.

Indicates the locking pin of the stabilzers.

Indicates that the engine exhaust is a hot and harmful gas, which is toxic in case of inhalation. Always make sure that the unit is operated outside or in a well-ventilated room.

Indicates that these parts can become very hot during operation (e.g. engine, cooler, etc.). Always make sure that these parts are cooled down before touching them.

Indicates that the machine may produce noise at a sound pressure level dangerous to the hearing. It is recommended to use ear protection when operating the lighting tower.

Indicates the sound power level in accordance with Directive 2000/14/EC (expressed in dB (A)).

Indicates that the lighting tower may be refuelled with diesel fuel only.

Indicates that during refuelling it is prohibited to smoke and a safe distance from flames or sparks must be kept.

Indicates the location of the battery.

Indicates the different earthing connections on the lighting tower.

Indicates the danger of touching rotating parts of the unit.

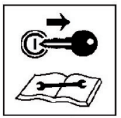

Indicates that the key should be removed before starting maintenance operations.

Indicates that a horizontal towbar position is required in case of coupling.

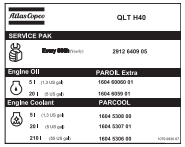

Indicates the partnumbers of the different service packs and of the engine oil. These parts can be ordered to the factory.

2.3 Mechanical features

2.3.1 Engine and alternator

The alternator is driven by a fluid-cooled diesel engine. The engine's power is transmitted through a direct disc coupling.

The lighting tower houses a single bearing alternator with a dedicated voltage regulator.

The synchronous brushless alternator has Class H rotor and stator windings in an IP21 housing.

2.3.2 Cooling system

The engine is provided with a water cooler. The cooling air is generated by a fan, driven by the engine.

2.3.3 Safety devices

The engine electronics monitor the engines parameters and generate warning and shut-down signals when the parameters reach a preset treshold value.

2.3.4 Bodywork

The alternator, the engine, the cooling system, etc. are enclosed in a sound-insulated bodywork that can be opened by means of a side door (and service plates).

The lighting tower can be lifted by using the lifting eye integrated in the bodywork (roof). To be able to lift the QLT H40 by means of a forklift, rectangular holes are provided in the frame.

The earthing rod, to be connected to the lighting tower's earth terminal is located at the bottom of the frame on the outside.

2.3.5 Control panel

The control panel grouping the controller, fuses, autoamtic switches sockets, etc., is placed at the right side.

2.3.6 Data plate and serial number

The lighting tower is furnished with a data plate showing the product code, the unit number and the power output (see "Dataplate" on page 55).

The serial number is located on the left-hand side of the towbar.

2.3.7 Filler caps

The fuel filler cap is located on the roof. The filler cap for the engine coolant is accessible via an opening in the roof.

The engine oil filling cap is located inside the canopy. It can be reached by opening the rear door of the unit.

2.3.8 Spillage free skid

A spillage free skid with forklift slots allows the customer to transport the lighting tower easily with a forklift. It avoids accidental spilling of engine fluids and thus helps to protect the environment.

The leaking fluid can be removed via drain holes, secured by drain plugs. Tighten the plugs firmly and check for leakages. When removing the leaking fluid, observe all relevant local legislation.

2.3.9 Undercarriage, road lights and reflectors

The lighting tower trolley is manufactured according to ISO/European road standards currently applicable.

The undercarriage is equipped with an adjustable or fixed towbar with French-eye, DIN-eye, BNA-eye, ITA-eye, NATO eye or ball coupling. Make sure that the towing equipment of the vehicle matches the towing eye before towing the lighting tower.

Road lights and reflectors are standard. For cable connections see the circuit diagram.

2.3.10 Mast and torches

The lighting tower mast consists of 8 mast sections and can be extended up to 9 metres in 15 sec. It is operated by a fully automated hydraulic lift. The mast can be rotated through 350°.

The lighting tower provides 4 metal halide lamps of 1000 Watt with a maximum lighting capacity of 85.000 lumen/bulb. Each lamp can be separately positioned and inclined.

2.4 Electrical features

2.4.1 Control and indicator panel

To operate the lighting tower a control panel is installed.

3A1 ..... Controller display

ES ..... Emergency stop button

Push the button to stop the lighting tower in case of an emergency. When the button is pressed, it must be unlocked, before the lighting tower can be restarted. The emergency stop button can be secured in the locked position with the key, to avoid unauthorized use.

F1-3..... Fuses

The fuses activate when the current from the battery to the engine control circuit exceeds its setting. The fuses can be reset by pushing the button.

3SW1.. Ignition key

Position HEAT: to heat up glow plugs

Position START: to start the engine

Position ON: to keep the engine running after start-up

Position OFF: to switch off the engine

3HL1 ... Light preheater

A yellow light signals that the glow plugs are being heated (ignition key turned to HEAT).

2Q1 ..... ECLB or differential protection

Interrupts the power supply when a short-circuit occurs at the load side, or when the earth leak detector (30 mA) or the overcurrent protection (32 A) are activated. It must be reset manually after eliminating the problem.

2Q2-3.. Socket protections

The control panel provides 2 socket protections (one for each socket).

2Q5-8.. Automatic switches for lamps

The control panel provides 4 circuit breakers for the lamps (one for each lamp).

PU ..... UP button

Push the UP button to extend the mast.

PD ..... DOWN button

Push the DOWN button to lower the mast.

2.4.2 Battery switch

The battery switch is situated inside the sound-insulated bodywork. It allows to open or to close the electrical connection between the battery and the engine circuits.

Never turn the battery switch to OFF during operation.

2.4.3 Fuses

Fuses (F1-F2-F3) are for the protection of the controller against overloads and short circuits.

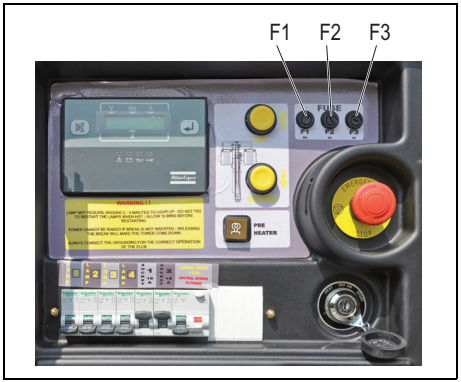

– F1: protection of the 12V circuit;

– F2, F3: 220V protection, instrumentation reading (V, Hz).

2.4.4 Outlet sockets

A brief description of all outlet sockets and circuit breakers provided on the lighting tower is given hereafter:

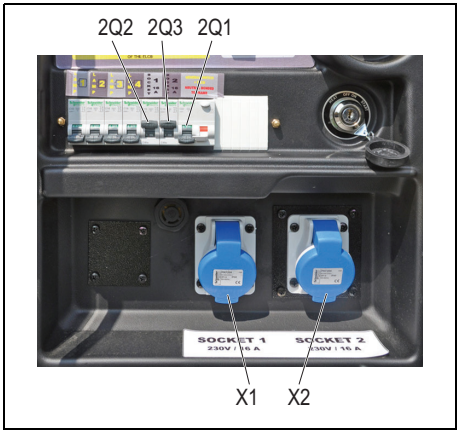

X1 ..... 1-phase outlet socket (230 V)

Provides phase F, neutral and earthing.

X2 ..... 1-phase outlet socket (230 V)

Provides phase F, neutral and earthing.

2Q2 .....Circuit breaker for X1

Interrupts the power supply to X1 when a short-circuit occurs at the load side, or when the overcurrent protection (16 A) is activated. When activated, 2Q2 interrupts phase F and the neutral towards X1. It can be activated again after eliminating the problem.

2Q3 .....Circuit breaker for X2

Interrupts the power supply to X2 when a short-circuit occurs at the load side, or when the overcurrent protection (16 A or 32 A) is activated. When activated, 2Q3 interrupts phase F and the neutral towards X2. It can be activated again after eliminating the problem.

Circuit breaker 2Q1 does not only interrupt the power supply towards X1, but also towards X2 and the 4 lamps.
Make sure to switch on circuit breakers 2Q1, 2Q2 and 2Q3 after starting the lighting tower when power supply is done by means of X1 or X2.

3 Installation and connection

3.1 Lifting

The lifting eye, to lift the lighting tower by means of a hoist, is integrated in the bodywork and easily accessible from the outside.

When lifting the lighting tower, the hoist has to be placed in such a way that the lighting tower, which must be placed level, will be lifted vertically.

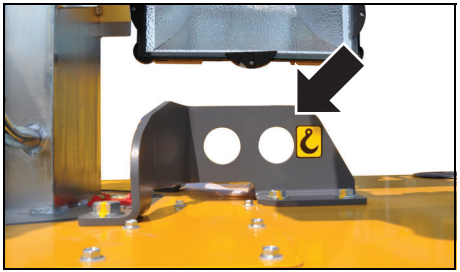

Lifting acceleration and retardation must be kept within safe limits (max. 2 g).
Helicopter lifting is not allowed.

To be able to lift the lighting tower by means of a forklift, rectangular holes are provided at the bottom of the frame.

3.2 Parking and towing

The operator is expected to apply all relevant safety precautions, including those mentioned on page 8 to page 13 of this booklet.

3.2.1 Unhooking the lighting tower

1. Secure the support leg (1) or jockey wheel to support the lighting tower in a level position.
2. Adjust the height of the support leg/jockey wheel using the crank (2).
3. Block the jockey wheel by its locking lever.

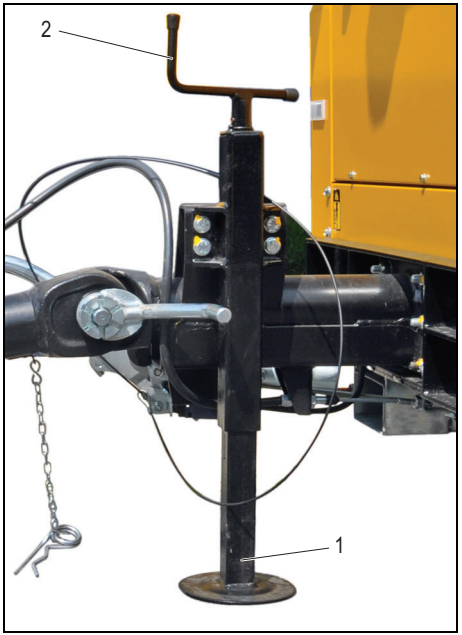

Never release the locking lever while the jockey wheel is supporting the weight of the lighting tower, otherwise the machine could over-balance and harm whoever is close.

To release the lighting tower from the towing vehicle, carefully follow the procedure below:

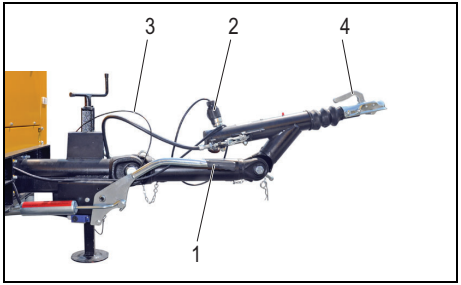

1. Engage the hand brake (1).
2. Disconnect the cable plug for the trailer lights (2).
3. Disconnect the safety wire from the towing vehicle (3).
4. Uncouple the trailer from the towing vehicle by releasing the locking lever of the tow-bar coupler (4).
5. Proceed with positioning to set up the lighting tower.

To reconnect the lighting tower to the towing vehicle, proceed as above but in the reverse order (see “Towing” on page 23).

3.2.2 Positioning the lighting tower

Follow the steps below to position the lighting tower:

1. Ensure that the hand brake (1) is engaged. The end-of-drive sensor underneath the hand brake must be fully pressed.
2. While firmly holding the supporting foot (5) of the lighting tower with one hand, release the rotating locking pin (8) and rotate the supporting foot through 90°.

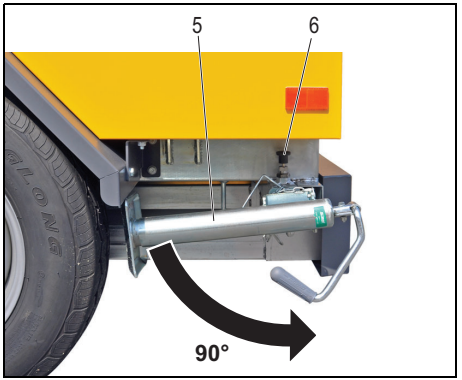

3. Once the supporting foot (5) has been rotated, reposition the rotating locking pin (8), making sure that it locks the foot perpendicularly to the bearing surface (7).

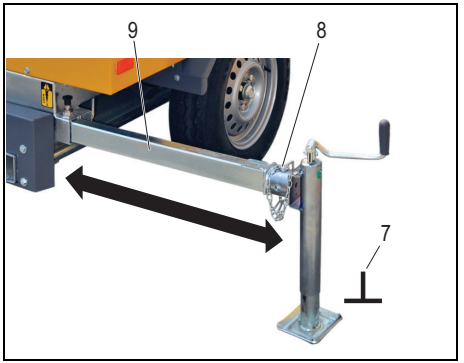

4. Release the locking pin of the stabilizer (6) by lifting it up and pull the foot into its initial position (7) at the maximum extension of the stabilizer (9).
5. Once the stabilizer has been extended, release the locking pin (6) to lock the stabilizer in position.

6. Turn the handle (10) at the top of the supporting foot to lower the foot.

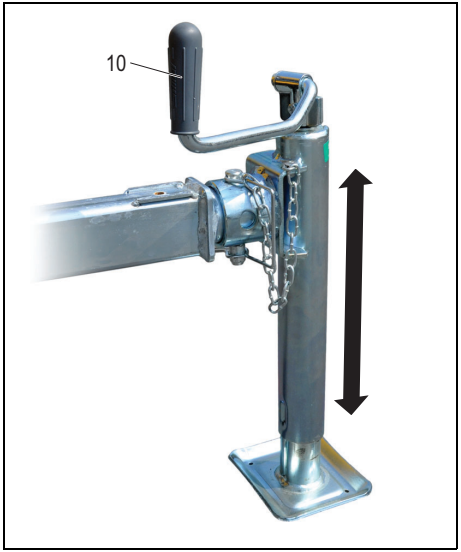

Once the lighting tower is correctly positioned, fix the earth rod (the copper bar for earthing (11)) and make sure that it is correctly connected to the lighting tower (12).

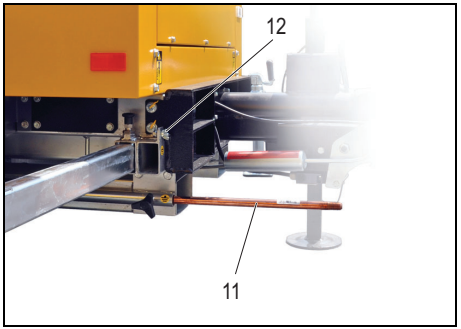

3.2.3 Positioning for transportation

1. Push the DOWN button on the control panel (1) to lower the mast (see also “Extending the mast” on page29). The mast is lowered completely when the end-of-run button is pushed down and the intermittent siren stops.

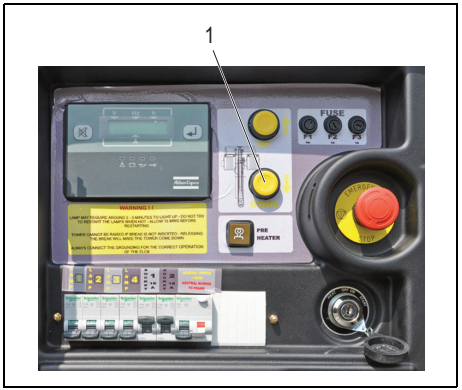

2. Make sure that the jockey wheel is safely fastened by its own locking lever to ensure that the lighting tower is still stable once the stabilizing feet are removed.
3. Adjust the height of the support leg/jockey wheel using the crank (2). The support leg/jockey wheel should never touch the ground once the lighting tower is coupled to the hook of the towing vehicle (3).

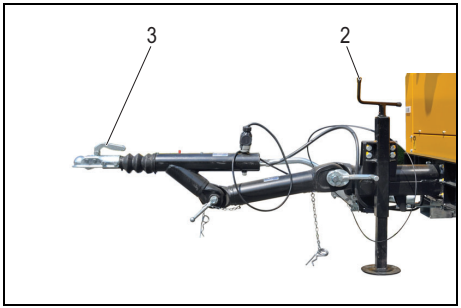

4. Use the handle at the top of each foot to retract the 4 feet following the reverse order of the procedure described in numbers 2-3-4-5 in “Unhooking the lighting tower” on page 20. The feet must be stowed as shown below.

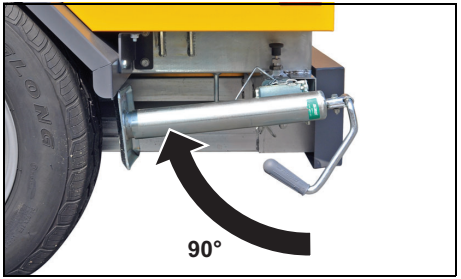

Once all the above operations are complete, you will have returned the lighting tower to the same state as it was before the positioning procedure (see figure above). At this point the lighting tower is correctly arranged for transportation.

3.2.4 Towing

Before commencing towing, ensure you follow the procedure below:

1. Check that the coupler (1) of the undercarriage of the lighting tower is safely coupled to the towing hook of the hauling vehicle.

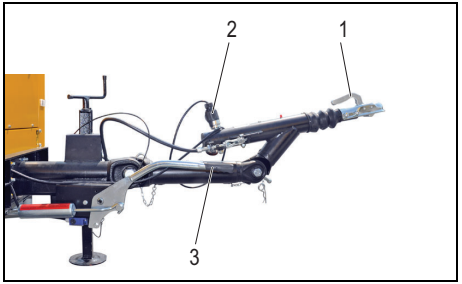

2. Connect the cabling plug (2) to the hauling vehicle so that the rear lights of the lighting tower work (indicators, lights, brake lights).
3. Check that the pressure and condition of the tyres are suitable for the road and the climatic conditions.
4. Release the hand brake (3).

Do not proceed with towing if you notice any broken or faulty parts.

Drive carefully according to the road and climatic conditions.

3.2.5 Transportation and positioning of the lighting tower onto vehicles

As well as the ability to be towed, the lighting tower can also be easily lifted and moved to difficult areas thanks to its central lifting eye and fork lift holes on its underside. All that is needed is a fork lift truck or a mechanical arm.

The fork lift holes and the lifting eye can also be used to place the lighting tower onto trucks for road transportation.

If the lighting towers are carried on trucks or similar vehicles:

1. Ensure that the machine is stable and secure.
2. Check that the lighting tower is placed perfectly horizontally - it is equipped with 4 fixing points for stability (1).
3. Use straps or other means of anchoring provided that these do not affect the machine's safe transportation and integrity.
4. It is recommended that the machine is covered by a tarpaulin to protect it against bad weather conditions if it is transported on an open truck.

3.3 Installation

3.3.1 Indoor installation

If the machine is operated in a closed environment, make sure that there is enough ventilation to remove the exhaust gases from the room where the engine is running; also ensure that the exhaust gases are discharged at a distance that will not allow them to be drawn back into the engine. Install an exhaust pipe of sufficient diameter to duct the engine exhaust towards the outside. Check for sufficient ventilation so that the cooling air is not recirculated.

Place the machine at least at 1m from each wall and the ceiling and provide suitable openings to allow sufficient air flow for adequate cooling and good engine combustion.

For more information about indoor installation, consult your local Atlas Copco dealer.

3.3.2 Outdoor installation

- Place the lighting tower on a horizontal, even and solid floor.
- The lighting tower should be kept with the doors closed, in order to avoid the ingress of water and dust. Dust ingress reduces the lifetime of filters and may reduce your lighting tower's performance.
- Check that the engine exhaust is not directed towards people.
- Locate the rear end of the lighting tower upwind, away from contaminated windstreams and walls. Avoid recirculation of exhaust air from the engine. This causes overheating and engine power decrease.
- Leave enough space for operation, inspection and maintenance (at least 1 meter at each side).
- Check that the inner earthing system is in compliance with the local legislation.
- Use coolant for the engine cooling system. Refer to the Engine instruction book for the proper coolant mixture.
- Check the tightness of the bolts and nuts.
- Install the earthing rod as near as possible to the lighting tower and make sure not to have a contact voltage higher than 25 V.
- Use a cable of suitable section (at least 6 mm^2) to connect the PE terminal to an earth plate that can ensure an earth resistance suited to the characteristics of the lighting tower.
- Check that the cable end of the earthing rod is connected to the earth terminal.

The lighting tower is wired for a TN-system to IEC 364-3, i.e. one point in the power source directly earthed - in this case the neutral. The exposed conductive parts of the electric installation must be directly connected to the functional earth.

3.4 Connecting the lighting tower

3.4.1 Precautions for non-linear and sensitive loads

Non-linear loads draw currents with high contents in harmonics, causing distortion in the wave form of the voltage generated by the alternator.

The most common non-linear, 3-phase loads are thyristor/rectifier-controlled loads, such as convertors supplying voltage to variable speed motors, uninterruptable power supplies and Telecom supplies. Gas-discharge lighting arranged in single-phase circuits generate high 3rd harmonics and risk for excessive neutral current.

Loads most sensitive to voltage distortion include incandescent lamps, discharge lamps, computers, X-ray equipment, audio amplifiers and elevators.

Consult Atlas Copco for measures against the adverse influence of non-linear loads.

4 Operating instructions

In your own interest, always strictly observe all relevant safety instructions.
Do not operate the lighting tower in excess of the limitations mentioned in the Technical Specifications.
Local rules concerning the setting up of low voltage power installations (below 1000 V) must be respected when connecting site distribution panels, switch gear or loads to the lighting tower generator.
At each start-up and at any time a new load is connected, the earthing and protections (GB trip and earth leakage relay) of the lighting tower must be verified. Earthing must be done either by the earthing rod or, if available, by an existing, suitable earthing installation. The protective system against excessive contact voltage is not effective unless a suitable earthing is made.

4.1 Before starting

- With the lighting tower standing level, check the engine oil level and top up if necessary. The oil level must be between the min and max levels on the engine oil level dipstick.
- Check the coolant level in the expansion tank of the engine cooling system. The coolant level must be between the min and max levels. Add coolant if necessary.
- Drain any water and sediment from the fuel pre-filter. Check the fuel level and top up if necessary. It is recommended to fill the tank after the day's operation to prevent water vapor in a nearly empty tank from condensing.
- Drain leaking fluid from the frame.
- Check the vacuum indicator of the air filter. If the red part shows completely, replace the filter element.
- Press the dust evacuator of the air filter to remove dust.
- Check the lighting tower for leakage, tightness of wire terminals, etc. Correct if necessary.
- Check that circuit breaker 2Q1 is switched off.
- Check that the fuses have not tripped and that the emergency stop is in the OUT position.
- Check that the load is switched off.

4.2 Starting and stopping the engine

4.2.1 Before the engine is started

Carefully follow all the starting instructions in the engine's Manual as well as those contained in this Manual.

4.2.2 Electric start-up procedure for the lighting tower

Connect the current by means of the Battery Isolator Switch (1) placed inside the lighting tower and accessible through the rear door.

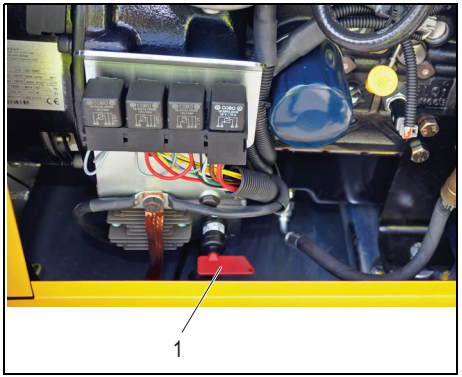

This procedure must be carried out each time that you start the lighting tower.
It is recommended that you isolate the battery by repositioning the battery isolator switch every time the machine is moved and when it is not in use.

4.2.3 Starting the engine

1. Before starting the engine, check that all the automatic switches (general ELCB, sockets protection and lamp circuit breakers) are in the OFF position (1).

2. Before turning the ignition key (2) into the START position (3) to start the engine, please remember that on diesel engines with indirect injection it is necessary to first turn the key anticlockwise to HEAT (4) to allow the glow plugs to heat up.

   A yellow light (5) will signal that the glow plugs are being heated (keep the key turned to HEAT) until you release the key.

3. Never run the starter motor for longer than 8 seconds at each attempt; if the engine does not start, wait at least 10 seconds and then try again.
4. Once the engine has started, release the starter so to avoid any damage to the starter motor and leave the key in the ON position (6)
5. The controller (7) will activate the engine protection systems. If any of the parameters deviate from the norm (for example, low oil or fuel level, etc) the controller will intervene and signal the problem. The manual for the controller that also accompanies the machine, will provide you with more information on the error message displayed.

4.2.4 Switching off the engine

Follow the instructions below to switch the engine off correctly:

1. Disconnect all electrical appliances connected to the sockets (1).
2. Place all the automatic switches in their OFF position (2).

3. It is important to let the engine run at zero load for a few minutes before turning it off.
4. Turn the key counterclockwise into the OFF position (3) to switch off the engine

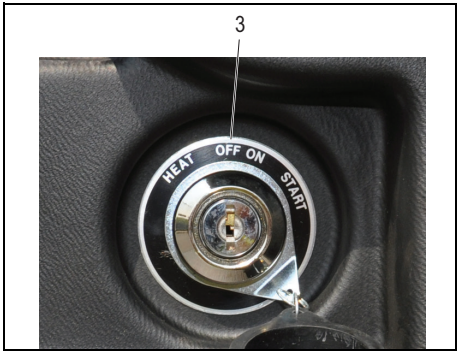

Should an emergency arise, it is also possible to stop the machine by pressing the EMERGENCY 'STOP' button (4). If the machine is stopped in this way, the emergency stop button must be released by rotating it clockwise.

4.3 Operating the lighting tower

4.3.1 Aligning the spotlights

1. Check that the glass panes of the lights (1) are in good condition.

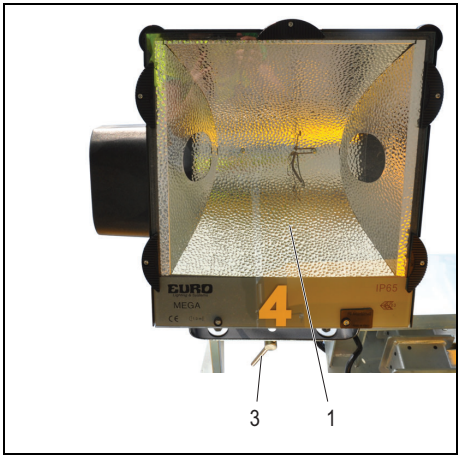

2. Adjust the inclination of the spotlight using the wheels (2) placed at the sides of the spotlight.

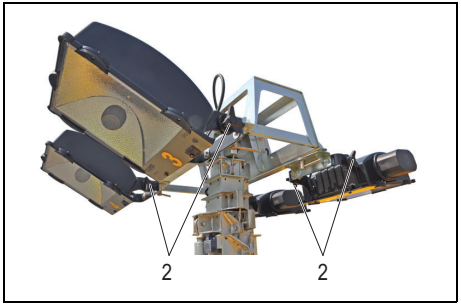

3. Adjust the rotation of the spotlight using the adjusting lever (3) on the bracket of the support.
4. Proceed with the extension of the mast as described below.

4.3.2 Extending the mast

The mast cannot be raised if the hand brake is not applied.
If the hand brake is released while the mast is still up, the mast will descend to its initial position or until the hand brake is applied (this will be signalled through an intermittent alarm sound).

1. Check that the emergency push button (1) has not been pushed. (If it has been pushed, a message will appear on the display and an acoustic alarm will sound.)

2. Open the door of the control panel and start the engine as described in “Electric start-up procedure for the lighting tower” and “Starting the engine” on page 27. (If there is no fuel, there will be a message on the display and an acoustic alarm.)
3. Put the general circuit breaker (2) to the ON position and all other switches (3) to the OFF position.
4. Use the UP (4) and DOWN (5) buttons on the control panel to extend and adjust the mast to the desired height (max 9 metres). When the mast is being extended/lowered, an intermittent sound will signal that the operation is in progress.
5. Release the locking pin (6) and the clutch locking lever (7) of the mast (located on its rotating base) and rotate the lighting tower using the handles provided for this purpose (8) to further adjust the light beam. The mast can be rotated through 350°.

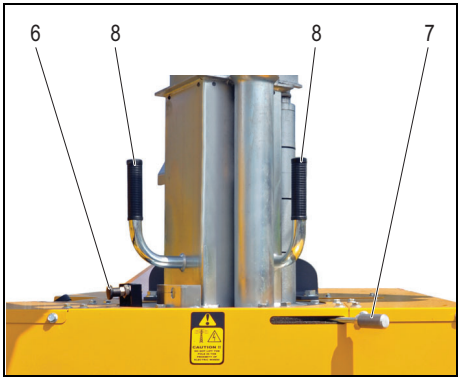

6. Lock the mast again using its locking pin (6) and lever (7).

Do not extend the mast at a wind speed stronger than 80 km/h.

4.3.3 Switching on the spotlights

1. Place the 4 automatic switches (LAMP 1, LAMP 2, LAMP 3 and LAMP 4) (1) in the ON position.

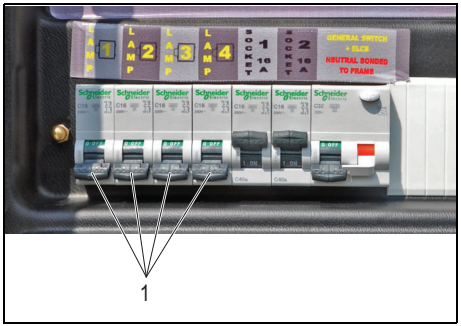

2. Wait for the lights to heat up. This will take about 2-3 minutes.
3. Close the control panel door (2).

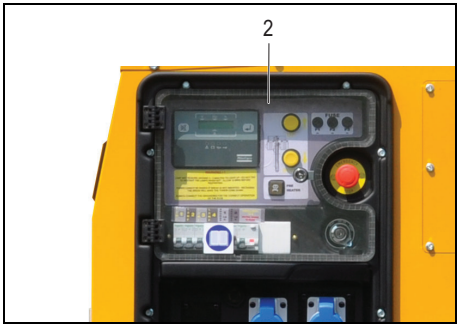

4.3.4 Switching off the spotlights

To switch the lights off, follow the procedure described in “Switching on the spotlights” but in the reverse order and proceed to lower the mast.

1. Open the control panel door (2).
2. Position the 4 automatic switches (LAMP 1, LAMP 2, LAMP 3, LAMP 4) (1) to the OFF position.

3. Wait for the lamps to cool down - this will take around 15 minutes.
4. If the spotlights are not to be used again, lower the mast using the DOWN button on the control panel (3).

5. The mast is lowered completely when the end-of-run button (4) is pushed down and the intermittent siren stops.

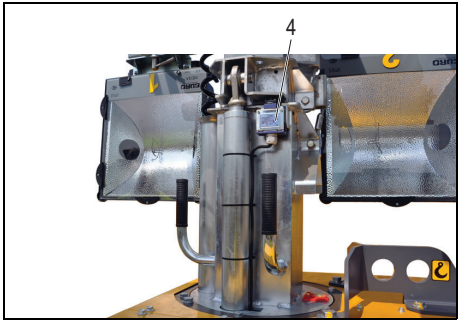

Once the lights are switched off (switches in the OFF position), remember not to switch them ON again until the cooling-off time is over.

If you do not wish to use the generating set on its own, switch off the engine (and therefore the machine) as described on page 28.

4.4 Connecting appliances

1. Wait 3 or 4 minutes before connecting the appliances to allow the engine to warm up enough. Then plug in the socket (1).

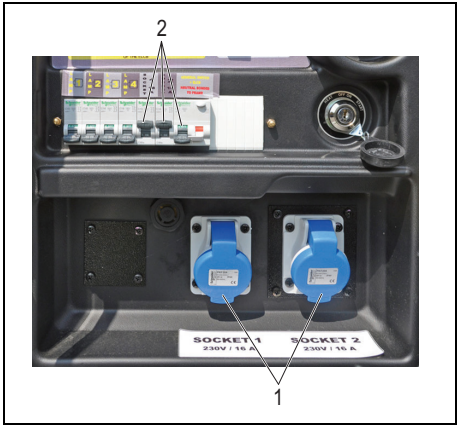

2. Make sure that a correct voltage is displayed.
3. Switch on your appliance.
4. If the breaker (2) trips, adjust the load until it falls within the maximum power limit allowed for the generating set.
5. Make sure that the load does not exceed the nominal power of the generating set as indicated in the technical data sheet and guaranteed with a tolerance of ± 5% when the engine has run in.

   Derating will be 1% for every 100 m of altitude, 2% for every 5°C above 20°C and 10% when used continuously at constant load.
6. Make sure the load does not exceed the nominal current capacity of the socket or the cable connected to it.

Avoid long low-load periods (< 30%). In this case, an output drop and higher oil consumption of the engine could occur. Refer to 'Preventing low loads'.

7. Never connect the lighting tower directly to the mains.

To correctly disconnect the appliances from the lighting tower generator, first position the switch to OFF to isolate the electric load and only then remove the plug.

5 Periodic maintenance

5.1 Maintenance schedule

Before carrying out any maintenance activity, check that the ignition switch is in position OFF and that no electrical power is present on the terminals.

Maintenance schedule	Daily	Every 500 hours or yearly	Every 1000 hours	Every 2000 hours
Service pak	-	**2912 6409 05**	-	-
For the most important subassemblies, Atlas Copco has developed service kits that combine all wear parts. These service kits offer you the benefits of genuine parts, save on administration costs and are offered at reduced price, compared to the loose components. Refer to the parts list for more information on the contents of the service kits.				
Check for air, fuel, coolant and oil leakage	x	x	x	x
Check oil and coolant level	x	x	x	x
Check or drain water in fuelfilter/waterseparator	x	x	x	x
Clean air cleaner and dust bowl	x	x	x	x
Visual walk around the unit	x	x	x	x
Check tension and condition of the V-belt (1)		x	x	x
Replace engine oil (2)		x	x	x
Replace engine oil filter		x	x	x
Grease door hinges and locks		x	x	x
Replace fuel filter element		x	x	x
Check electrolyte level and terminals of battery		x	x	x
Check electrical system for security of cables and wear		x	x	x
Check engine electrical ground connection		x	x	x
Replace air filter element		x	x	x

Check/clean radiator/cooler fins			x	x
Check crankcase ventilation system			x	x
Replace V-belt (1)			x	x
Measure alternator insulation resistance			x	x
Check glycol level in coolant			x	x
Check PH level of engine coolant			x	x
Check and adjust engine inlet and outlet valves (3)			x	x
Test glow plugs			x	x
Check alternator and starter motor				x
Test thermostats				x
Check engine mounts				x
Inspection by Atlas Copco Service technician	⚠	**Lighting towers in standby application have to be tested on a regular basis. At least once a month the engine should run for minimum 30 minutes at a high load (50% - 70%) that the engine reaches its operating temperature.**		

Notes:

(1) V-belt can be ordered with PN 2914 9876 00.

(2) Use PAROIL Extra only.

(3) Rocker cover gaskets can be re-used after valve clearance.

Fuel injectors should be tested every 3000 hrs

Inspect water pump every 3000 hrs

5.1.1 Precautions

- Before proceeding with any type of maintenance, please take all the necessary precautions to avoid accidentally starting the engine: disconnect the battery, remove the starter key and push the STOP button.
- Do not carry out any change or modification to any part of the lighting tower or its electric system.
- Do not carry out any maintenance when the engine is running.
- Be careful when close to any moving parts (e.g. pulleys, fans …) and to any hot parts (e.g. muffler, engine block, coolants, lubricants …).

5.1.2 Use of maintenance schedule

Regular maintenance is essential for the optimum performance, safe operation and a longer working life of the machine.

The maintenance schedule contains a summary of the maintenance instructions. Read the respective section before taking maintenance measures.

When servicing, replace all disengaged packings, e.g. gaskets, O-rings, washers.

For engine maintenance refer to Engine Operation Manual.

The maintenance schedule has to be seen as a guideline for units operating in a dusty environment typical to lighting tower applications. Maintenance schedule can be adapted depending on application, environment and quality of maintenance.

5.1.3 Use of service paks

Service Paks include all genuine parts needed for normal maintenance of both generator and engine. Service Paks minimize downtime and keep your maintenance budget low.

The order number of the Service Paks are listed in the Atlas Copco Parts list (ASL). Order Service Paks at your local Atlas Copco dealer.

5.2 Preventing low loads

To avoid cylinder glazing, high oil consumption or other damages to the engine, it is recommended that a unit is always used with a load > 30% of nominal.

Corrective actions should be taken if due to circumstances this minimum load capacity cannot be obtained. Operate the unit at full load capacity after any low load operating period.

As switching on the spotlights of the lighting tower provides around 50% of the load, low loads can be easily avoided.

For more info on this operation, please contact your Atlas Copco Service Center.

5.3 Maintenance of the alternator

The alternator does not require any specific general maintenance. However, please follow the indications in the Engine Operation Manual that accompanies the lighting tower.

5.3.1 Measuring the alternator insulation resistance

A 500 V megger is required to measure the alternator insulation resistance.

If the N-terminal is connected to the earthing system, it must be disconnected from the earth terminal. Disconnect the AVR.

Connect the megger between the earth terminal and terminal L1 and generate a voltage of 500 V. The scale must indicate a resistance of at least 5 MΩ.

Refer to the alternator operating and maintenance instructions for more details.

5.4 Engine maintenance procedures

- Regularly perform maintenance work and replace parts as indicated in the Engine Operation Manual.
- The engine should never run before filters have been correctly installed.
- Open the rear door of the lighting tower to access the engine and perform all necessary maintenance operations.
  - Unlock the rear door by using the key.
  - Open the rear door by pushing the black push button next to the key hole.

  The maintenance LED (1) on the controller display will blink when maintenance is requested.

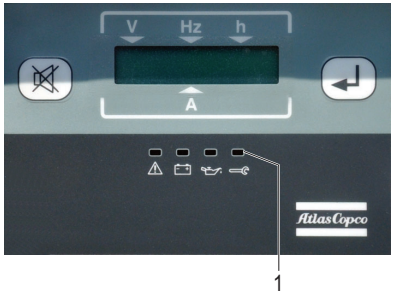

- Do not smoke and maintain a safe distance from flames and sparks while maintenance is being carried out and when fuels and solvents are being used.
- Carefully follow all the instructions contained in the Engine Operation Manual that accompanies the lighting tower.

5.4.1 Engine oil level check

Consult the Engine Operation Manual for the oil specifications, viscosity recommendations and oil change intervals. For the intervals, see also section “Maintenance schedule” on page 32.

- Check the engine oil level before every time that the lighting tower is used. To do this you must ensure that the machine stands on an even surface and that the engine is not running.

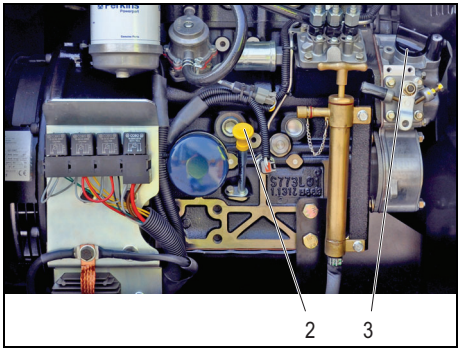

– Check the engine oil level by using the oil level dipstick (2).

– Make sure the oil level is between min (A) and max (B).

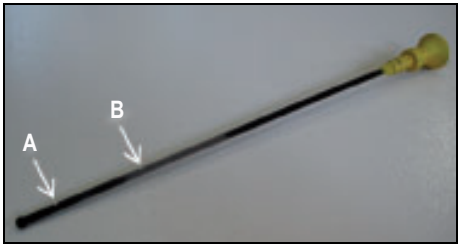

– Top up with oil (3), if necessary.

5.4.2 Engine oil and oil filter change

Regularly perform maintenance work and replace parts as indicated in the Engine Operation Manual .

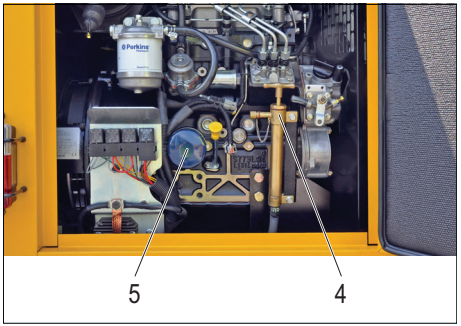

Replacing engine oil

Observe all relevant environmental and safety precautions.

– Replace oil as often as instructed in the Maintenance schedule.

– Oil can be extracted using the special oil extraction pump on the engine (4). By activating the piston on the pump, oil will be completely removed. You must place a receptacle next to the engine to collect this waste oil.

– Dispose of waste oil properly. All lubricant oils for engines and hydraulic circuits, both mineral and synthetic, are classified as dangerous waste. Disposing of waste oils in the environment would pollute the ground and ground water and is therefore strictly prohibited.

Never leave spilled liquids such as fuel, oil, water and cleansing agents in or around the lighting tower.

– It is recommended that you arrange for an authorized service centre to change the oil so that you ensure that the waste oil is disposed of properly.

Replacing the oil filter element

– Drain the oil as described above in “Replacing engine oil”.

– Unscrew the oil filter element (5) from the adapter head.

– Clean the adapter head sealing surface. Lightly oil the gasket of the new element and screw the latter onto the adapter head until the gasket is properly seated, then tighten with both hands.

– Top up the engine oil level.

– Run the engine for 1 minute and check the oil level using the oil level dipstick.

5.4.3 Coolant check

The level of the engine coolant must be between the min and max levels.

Do not open the radiator cap if the coolant is too hot.

If necessary, replenish the coolant in line with the instructions in the Engine Operation Manual.

5.4.3.1 Monitoring coolant condition

In order to guarantee the lifetime and quality of the product, thus to optimise engine protection, regular coolant-condition-analysis is advisable.

The quality of the product can be determined by three parameters.

Visual check

- Verify the outlook of the coolant regarding colour and make sure that no loose particles are floating around.

Long service intervals
5-year drain interval to minimize service costs (when used in accordance with the instructions).

pH measurement

- Check the pH value of the coolant using a pH-measuring device.
- The pH-meter can be ordered from Atlas Copco with part number 2913 0029 00.
- Typical value for EG = 8.6.
- If the pH-level is below 7 or above 9.5, the coolant should be replaced.

Glycol concentration measurement

- To optimise the unique engine protection features of the PARCOOL EG the concentration of the Glycol in the water should be always above 33 vol.%.
- Mixtures with more than 68 vol.% mix ratio in water are not recommended, as this will lead to high engine operating temperatures.
- A refractometer can be ordered from Atlas Copco with part number 2913 0028 00.

In case of a mix of different coolant products this type of measurement might provide incorrect values.

5.4.3.2 Topping up of coolant

- Verify if the engine cooling system is in a good condition (no leaks, clean,...).
- Check the condition of the coolant.
- If the condition of the coolant is outside the limits, the complete coolant should be replaced (see section “Replacing the coolant”).
- Always top-up with PARCOOL EG.
- Topping up the coolant with water only, changes the concentration of additives and is therefore not allowed.
- Additives might be necessary in order to enable the coolant to withstand lower temperatures.

5.4.3.3 Replacing the coolant

Drain

- Completely drain the entire cooling system.
- Used coolant must be disposed or recycled in accordance with laws and local regulations.

Flush

- Flush twice with clean water. Used coolant must be disposed or recycled in accordance with laws and local regulations.
- From the Atlas Copco Instruction book, determine the amount of PARCOOL EG required and pour into the radiator top tank.
- It should be clearly understood that the risk for contamination is reduced in case of proper cleaning.
- In case a certain content of 'other' coolant remains in the system, the coolant with the lowest properties influences the quality of the 'mixed' coolant.

Fill

- To assure proper operation and the release of trapped air, run the engine until normal engine operation temperature is reached. Turn off the engine and allow to cool.
- Recheck coolant level and add if necessary.

5.5 Adjustments and service procedures

5.5.1 Battery care

Before handling batteries, read the relevant safety precautions and act accordingly.
Always wear protective gloves and goggles when handling the battery - battery fluid contains sulphuric acid that can cause burns. If your skin or your clothes come in contact with the battery fluid, rinse immediately with plenty of water. If even a tiny quantity is swallowed, seek immediate medical help.

If the battery is still dry, it must be activated as described in section "Activating a dry-charged battery".

The battery must be in operation within 2 months from being activated; if not, it needs to be recharged first.

5.5.1.1 Electrolyte

Read the safety instructions carefully.

Electrolyte in batteries is a sulphuric acid solution in distilled water.

The solution must be made up before being introduced into the battery.

5.5.1.2 Activating a dry-charged battery

Always remove the battery and disconnect the terminals before carrying out any operation (charging or refilling).

- Take out the battery.
- Battery and electrolyte must be at equal temperature above 10°C.
- Remove cover and/or plug from each cell.
- Fill each cell with electrolyte until the level reaches 10 to 15 mm above the plates, or to the level marked on the battery.
- Rock the battery a few times so that possible air bubbles can escape; wait 10 minutes and check the level in each cell once more; if required, add electrolyte.
- Refit plugs and/or cover.
- Place the battery in the lighting tower.
- ALWAYS connect the positive (+) terminal first and the negative (-) terminal second.

5.5.1.3 Recharging a battery

Before and after charging a battery, always check the electrolyte level in each cell; if required, top up with distilled water only. When charging batteries, each cell must be open, i.e. plugs and/or cover removed.

Use a commercial automatic battery charger according to its manufacturer's instructions.

Apply with preference the slow charging method and adjust the charge current according to the following rule of thumb: battery capacity in Ah divided by 20 gives safe charging current in Amp.

5.5.1.4 Make-up distilled water

The amount of water evaporating from batteries is largely dependant on the operating conditions, i.e. temperatures, number of starts, running time between start and stop, etc...

If a battery starts to need excessive make-up water, this points to overcharging. Most common causes are high temperatures or a too high voltage regulator setting.

If a battery does not need any make-up water at all over a considerable time of operation, an undercharged battery condition may be caused by poor cable connections or a too low voltage regulator setting.

5.5.1.5 Periodic battery service

- Keep the battery clean and dry.
- Keep the electrolyte level at 10 to 15 mm above the plates or at the indicated level; top up with distilled water only. Never overfill, as this will cause poor performance and excessice corrosion.
- Record the quantity of distilled water added.
- Keep the terminals and clamps tight, clean, and lightely covered with petroleum jelly.
- Carry out periodic condition tests. Test intervals of 1 to 3 months, depending on climate and operating conditions, are recommended.
- If doubtful conditions are noticed or malfunctions arise, keep in mind that the cause may be in the electical system, e.g. loose terminals, voltage regulator maladjusted, poor performance of generator, etc...

Never charge the battery or refill the fluid when the battery is still installed in the machine! Possible spillage could damage vital parts of the generating set.
Atlas Copco accepts no responsibility for any damage to the lighting tower caused by spilling of the battery fluid.

5.5.2 Replacing fuel filter element

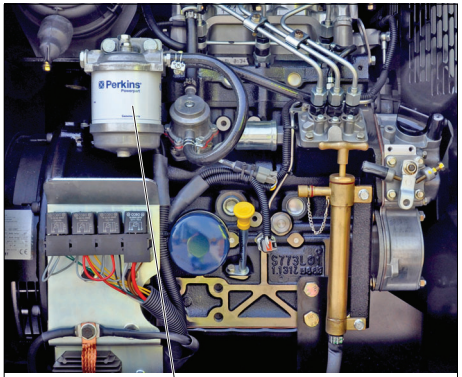

Replacing the filter element:

- Unscrew the filter element (1) from the adapter head.
- Clean the adapter head sealing surface. Lightly oil the gasket of the new element and screw the latter onto the header until the gasket is properly seated, then tighten with both hands.
- Check for fuel leaks once the engine has been restarted.

5.5.3 Servicing air filter engine

5.5.3.1 Main parts

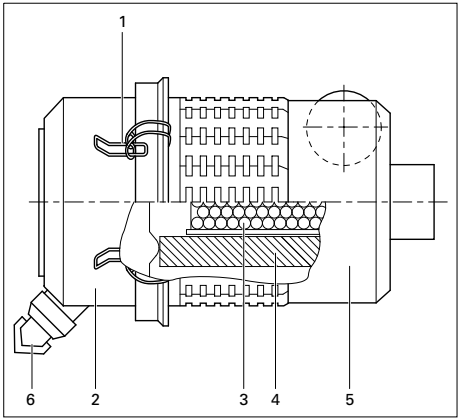

1	Snap clips
2	Dust trap
3	Safety cartridge
4	Filter element
5	Filter housing
6	Dust evacuator

5.5.3.2 Recommendation

The Atlas Copco air filters are specially designed for the application. The use of non-genuine air filters may lead to severe damage of engine and/or alternator. Never run the lighting tower without air filter element.

- New elements must also be inspected for tears or punctures before installation.
- Discard the filter element (4) when damaged.
- In heavy duty applications it is recommended to install a safety cartridge which can be ordered with part no.: 2914 9307 00.
- A dirty safety cartridge (3) is an indication of a malfunctioning air filter element (4). Replace the element and the safety cartridge in this case.
- The safety cartridge (3) cannot be cleaned.

5.5.3.3 Cleaning the dust trap

To remove dust from the dust trap (2) pinch the dust evacuator (6) several times.

5.5.3.4 Replacing the air filter element

- Release the snap clips (1) and remove the dust trap (2). Clean the trap.
- Remove the element (4) from the housing (5).
- Reassemble in reverse order of dismantling.
- Inspect and tighten all air intake connections.
- Reset the vacuum indicator.

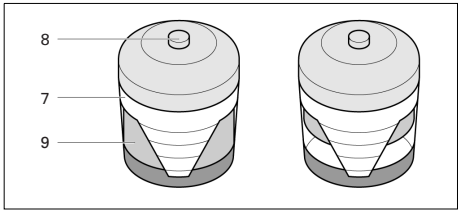

7	Air filter contamination indicator
8	Reset button
9	Yellow indicator

5.5.4 Air cooling circuit

Check every day that all the air cooling circuits are not clogged with dust or other particles. If any circuit is obstructed, it must be cleaned.

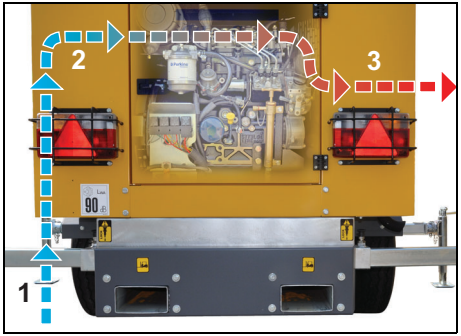

The cooling air follows the following path through the lighting tower:

- The air enters the circuit through an opening below the alternator (1)
- The air proceeds through the engine and alternator compartment of the lighting tower (2).
- The air exits through the fan, engine cooler and labyrinth, in that order (3).

5.5.5 Replacing the lamps

Do not touch the lamps when they are still hot without having taken all necessary precautions. It is recommended that protective gloves are always worn.

1. Release the 5 clamps and rotate them to open the protection glass. The glass must stay hinged on the bottom part of the spotlight (1).

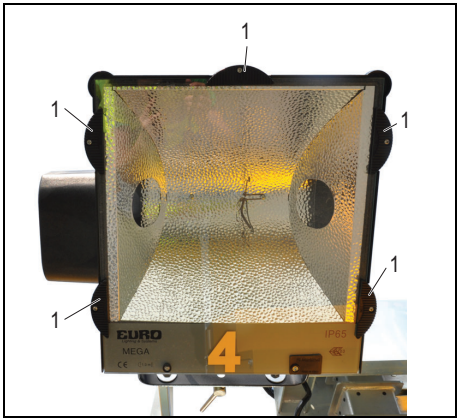

2. Remove the lamp, first releasing the safety spring (2) placed around the lamp and then unscrewing the lamp from its seat (3).

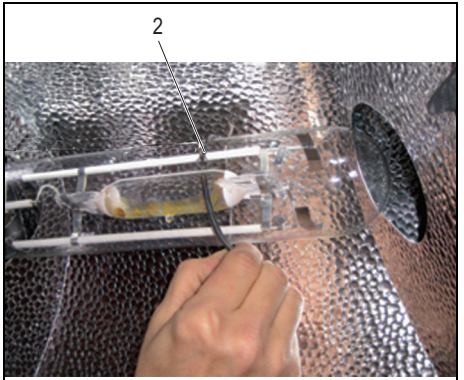

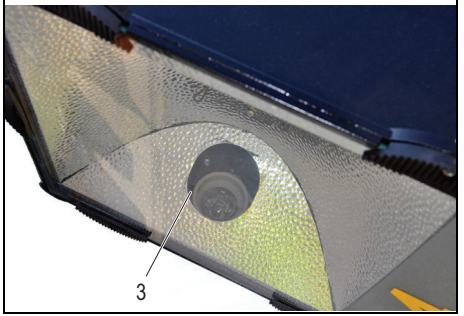

3. Install the new lamp and replace the safety spring (2).
4. Lock the protective glass using the 5 clamps and remember to carefully tighten the screws with a screwdriver.

A spare lamp for emergency situations can be kept in the tool space (4) on the side of the lighting tower opposite to the electric panel.

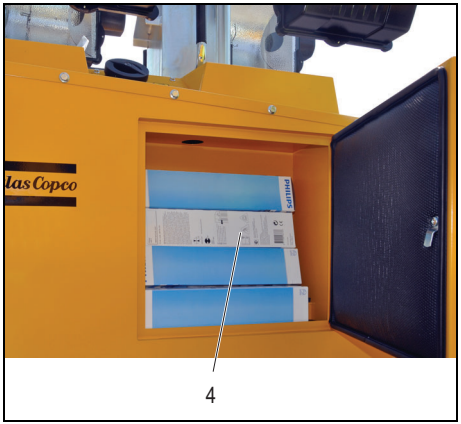

5.5.6 Ordering spare parts

It is possible to order spare parts for the lighting tower by making reference to the parts as mentioned in the enclosed Parts List manual.

Always quote the part number, the designation and the quantity of the parts required, as well as the type and the serial number of the machine.

5.6 Resetting service alarms

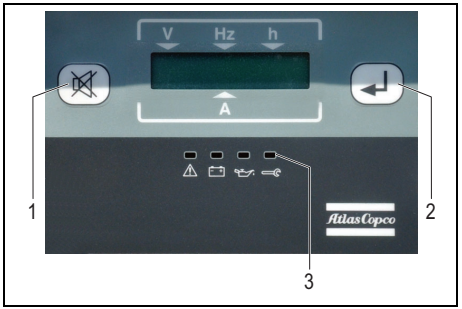

1. On the controller display, press the Alarm button (1) and the Enter button (2) simultaneously for at least 15 sec., until the following message appears:

   Example:

   MAIN. N.1 EXPIRED
   CANCEL ?

2. By pressing the Enter button (2) the expired maintenance operations are listed.
3. Press the Alarm button (1) for at least 3 seconds to cancel the maintenance operation. The following message will appear:

   Example:

   MAINTENANCE N.1
   CANCELLED

4. When all maintenance operations have been cancelled, the maintenance LED (3) will go out.

5.7 Engine consumable specifications

5.7.1 Engine fuel specifications

For fuel specifications, please contact your Atlas Copco Customer Center.

5.7.2 Engine oil specifications

It is strongly recommended to use Atlas Copco branded lubrication oils.

High-quality, mineral, hydraulic or synthesized hydrocarbon oil with rust and oxidation inhibitors, anti-foam and anti-wear properties is recommended. The viscosity grade should correspond to the ambient temperature and ISO 3448, as follows.

Engine	Type of lubricant
between -25°C and 50°C	PAROIL Extra

Specifications PAROIL

PAROIL from Atlas Copco is the ONLY oil tested and approved for use in all engines built into Atlas Copco compressors, generators and lighting towers.
Extensive laboratory and field endurance tests on Atlas Copco equipment have proven PAROIL to match all lubrication demands in varied conditions. It meets stringent quality control specifications to ensure your equipment will run smoothly and reliably.

The quality lubricant additives in PAROIL allow for extended oil change intervals without any loss in performance or longevity.

PAROIL provides wear protection under extreme conditions. Powerful oxidation resistance, high chemical stability and rust- inhibiting additives help reduce corrosion, even within engines left idle for extended periods.

PAROIL contains high quality anti-oxidants to control deposits, sludge and contaminants that tend to build up under very high temperatures.
PAROIL's detergent additives keep sludge forming particles in a fine suspension instead of allowing them to clog your filter and accumulate in the valve/rocker cover area.

PAROIL releases excess heat efficiently, whilst maintaining excellent bore-polish protection to limit oil consumption.
PAROIL has an excellent Total Base Number (TBN) retention and more alkalinity to control acid formation.

PAROIL prevents Soot build-up.

PAROIL is optimized for the latest low emission EURO -3 & -2, EPA TIER II & III engines running on low sulphur diesel for lower oil and fuel consumption.

PAROIL Extra

PAROIL Extra is a Synthetic ultra high performance diesel engine oil with a high viscosity-index. Atlas Copco PAROIL Extra is designed to provide excellent lubrication from start-up in temperatures as low as -25°C.

	Liter	US gal	Imp gal	cu.ft	Order number
can	5	1.3	1.1	0.175	1630 0135 00
barrel	20	5.3	4.4	0.7	1630 0136 00

5.7.3 Engine coolant specifications

Never remove the cooling system filler cap while coolant is hot.
The system may be under pressure. Remove the cap slowly and only when coolant is at ambient temperature. A sudden release of pressure from a heated cooling system can result in personal injury from the splash of hot coolant.
It is strongly recommended to use Atlas Copco branded coolant.

The use of the correct coolant is important for good heat transfer and protection of liquid-cooled engines. Coolants used in these engines must be mixtures of good quality water (distilled or de-ionised), special coolant additives and if necessary freeze protection. Coolant that is not to manufacturer's specification will result in mechanical damage of the engine.

The freezing point of the coolant must be lower than the freezing point that can occur in the area. The difference must be at least 5°C (41°F). If the coolant freezes, it may crack the cylinder block, radiator or coolant pump.

Consult the engine's operation manual and follow the manufacturer's directions.

Never mix different coolants and mix the coolant components outside the cooling system.

Specifications PARCOOL EG

PARCOOL EG is the only coolant that has been tested and approved by all engine manufacturers currently in use in Atlas Copco compressors, generators and lighting towers.

Atlas Copco's PARCOOL EG extended life coolant is the new range of organic coolants purpose designed to meet the needs of modern engines. PARCOOL EG can help prevent leaks caused by corrosion. PARCOOL EG is also fully compatible with all sealants and gasket types developed to join different materials used within an engine.

PARCOOL EG is a ready to use Ethylene Glycol based coolant, premixed in an optimum 50/50 dilution ratio, for antifreeze protection guaranteed to -40°C (-40°F).

Because PARCOOL EG inhibits corrosion, deposit formation is minimized. This effectively eliminates the problem of restricted flow through the engine coolant ducts and the radiator, minimizing the risk for engine overheating and possible failure.

It reduces water pump seal wear and has excellent stability when subjected to sustained high operating temperatures.

PARCOOL EG is free of nitride and amines to protect your health and the environment. Longer service life reduces the amount of coolant produced and needing disposal to minimise environmental impact.

	Liter	US gal	Imp gal	cu.ft	Order number
can	5	1.3	1.1	0.175	1604 5308 00
can	20	5.3	4.4	0.7	1604 5307 01
barrel	210	55.2	46	7.35	1604 5306 00

To ensure protection against corrosion, cavitation and formation of deposits, the concentration of the additives in the coolant must be kept between certain limits, as stated by the manufacturer's guidelines. Topping up the coolant with water only, changes the concentration and is therefore not allowed.

Liquid-cooled engines are factory-filled with this type of coolant mixture.

6 Checks and trouble shooting

Never perform a test run with connected power cables. Never touch an electrical connector without a voltage check.
When a failure occurs, always report what you experienced before, during and after the failure. Information with regard to the load (type, size, power factor, etc.), vibrations, exhaust gas colour, insulation check, odours, output voltage, leaks and damaged parts, ambient temperature, daily and normal maintenance and altitude might be helpful to quickly locate the problem. Also report any information regarding the humidity and location of the lighting tower (e.g. close to sea).

6.1 Engine troubleshooting

Refer to the Engine Operation manual for engine troubleshooting.

6.2 Solving controller alarms

The manual for the controller that also accompanies the machine, will provide you with more information on error messages displayed.

7 Storage of the lighting tower

7.1 Storage

– Store the lighting tower horizontally in a dry, frost-free room which is well ventilated.

– Run the engine regularly, e.g. once a week, until it is warmed up. This will ensure that the machine remains operational and is ready to be used when needed. If this is impossible, extra precautions must be taken:
  - Consult the engine's operator manual.
  - Remove the battery. Store it in a dry, frost-free room. Keep the battery clean and its terminals lightly covered with petroleum jelly. Recharge the battery regularly.
  - Clean the lighting tower and protect all electrical components against moisture.
  - Place silica gel bags, VCI paper (Volatile Corrosion Inhibitor) or another drying agent inside the lighting tower and close the doors.
  - Stick sheets of VCI paper with adhesive tape on the bodywork to close off all openings.
  - Wrap the generator, except the bottom, with a protective tarpaulin to avoid possible damage and corrosion due to environmental conditions..

7.2 Preparing for operation after storage

Before operating the lighting tower again, remove the wrapping, VCI paper and silica gel bags and check the lighting tower thoroughly (go through the checklist "Before starting" on page 26).

– Consult the engine's operator manual.

– Check that the insulation resistance of the alternator exceeds 5 MΩ.

– Replace the fuel filter and fill the fuel tank. Vent the fuel system.

– Reinstall and connect the battery, if necessary after being recharged.

– Submit the lighting tower to a test run.

8 Disposal

8.1 General

When developing products and services, Atlas Copco tries to understand, address, and minimize the negative environmental effects that the products and services may have, when being manufactured, distributed, and used, as well as at their disposal.

Recycling and disposal policy are part of the development of all Atlas Copco products. Atlas Copco company standards determine strict requirements.

Selecting materials the substantial recyclability, the disassembly possibilities and the separability of materials and assemblies are considered as well as the environmental perils and dangers to health during the recycling and disposal of the unavoidable rates of not recyclable materials.

Your Atlas Copco lighting tower consists for the most part of metallic materials, that can be remelted in steelworks and smelting works and that is therefore almost infinite recyclable. The plastic used is labelled; sorting and fractioning of the materials for recycling in the future is forseen.

This concept can only succeed with your help. Support us by disposing professionally. By assuring a correct disposal of the product you help to prevent possible negative consequences for environment and health, that can occur with an inappropriate waste handling.
Recycling and re-usage of material helps to preserve natural resources.

8.2 Disposal of materials

Dispose contaminated substances and material separately, according to local applicable environmental legislations.

Before dismantling a machine at the end of its operating lifetime drain all fluids and dispose of according the applicable local disposal regulations.

Remove the batteries. Do not throw batteries into the fire (explosion risk) or into the residual waste. Separate the machine into metal, electronics, wiring, hoses, insulation and plastic parts.

Dispose all components according to the applicable disposal regulations.

Remove spilled fluid mechanically; pick up the rest with absorbing agent (for example sand, sawdust) and dispose it according the applicable local disposal regulations. Do not drain into the sewage system or surface water.

9 Technical specifications of the lighting tower

9.1 Technical specifications of the engine/alternator/unit

		50 Hz
Reference conditions 1) 4)	Rated frequency	50 Hz
	Rated speed	1500 rpm
	Generator service duty	PRP
	Absolute air inlet pressure	100 kPa
	Relative air humidity	31.5%
	Air inlet temperature	25°C
Limitations 2)	Maximum ambient temperature	50°C
	Altitude capability	4500 m
	Maximum relative air humidity	85%
	Minimum starting temperature unaided	-20°C
Performance data 2) 3) 4) 5)	Rated active power (PRP) 1 ph	5.9 kW
	Rated power factor (lagging) 1ph	0.8 cos ϕ
	Rated apparent power (PRP) 1ph	7.4 kVA
	Rated voltage 1ph line to line voltage	230 V
	Rated current 1ph	32.0 A
	Performance class (acc.ISO 8528-5:1993)	G1
	Single step load acceptance (0-PRP)	100%
		5.9 kW
	Frequency droop	<8%
	Fuel consumption at no load (0%)	0.73 kg/h
	Fuel consumption 4 lamps ON	1.57 kg/h
	Fuel consumption at full load (100%)	1.79 kg/h
	Specific fuel consumption 4 lamps ON	0.393 kg/kWh
	Specific fuel consumption at full load (100%)	0.320 kg/kWh
	Fuel autonomy 4 lamps ON	79.4 h
	Fuel autonomy at full load (100%)	69.7 h
	Max. oil consumption at full load	0.005 l/h

	Maximum sound power level (LWA) measured according to 2000/14/EC OND (measured @ 75% PRP load)	90 dB(A)
	Useful capacity of fuel tank	145 l
	Single step load capability (0-PRP)	100%
		5.9 kW
Application data	Mode of operation	PRP
	Site	land use
	Operation	single
	Start-up and control mode	manual
	Start-up time	unspecified
	Mobility/Config. acc. to ISO 8528-1:1993	mobile/E
	Mounting	fully resilient
	Climatic exposure	open air
	Status of neutral (TT)	earthed
Alternator	Standard	IEC34-1
		ISO 8528-3
	Make	Sincro
	Model	SK 160 SA 1
	Rated output, class H temperature rise	9 kVA
	rating type acc. ISO 8528-3	S1 40/125°C cl. H
	Degree of protection	IP 21
	Insulation stator class	H
	Insulation rotor class	H
	Number of wires	4
Engine	Standard	ISO 3046
		ISO 8528-2
	Type PERKINS	403D-11G
	Rated net output (with fan)	8.4 kW
	rating type acc. ISO 3046-7	ICXN
	Coolant	coolant
	Combustion system	indirect injection
	Aspiration	naturally aspirated

	Number of cylinders	3
	Swept volume	1.13 l
	Speed governing	mechanical
	Capacity of oil sump	4.2 l
	Capacity of cooling system	4.9 l
	Electrical system	12 Vdc
	Emission compliance	EU STAGE II
Power circuit	**Circuit-breaker, 1ph.**	
	Number of poles	2
	Thermal release It (thermal release is higher at 25°C)	32 A
	Magnetic release Im	5-10 x In
	Fault current protection	
	Residual current release IDn	0.03 A
	Outlet sockets (optional)	CEE form 2P + E 16A/230V
		CEE form 2P + E 32A/230V
	External supply socket (optional)	CEE form 2P + E 32A/230V
Unit	Dimensions (adj. towbar) (LxWxH)	2910 x 1320 x 2270 mm
	Dimensions (fixed towbar) (LxWxH)	2460 x 1320 x 2270 mm
	Max. dimensions - stabilizers and mast extended (adj. towbar) (LxWxH)	2910 x 2440 x 9000 mm
	Max. dimensions - stabilizers and mast extended (fixed towbar) (LxWxH)	2460 x 2440 x 9000 mm
	Weight net mass (adj. towbar)	1160 kg
	Weight net mass (fixed towbar)	1120 kg
	Weight wet mass (adj. towbar)	1270 kg
	Weight wet mass (fixed towbar)	1240 kg

Weight at the towing eye (ready to operate) (adj. towbar - stretched)	70 kg
Weight at the towing eye (ready to operate) (adj. towbar - folded)	74 kg
Weight at the towing eye (ready to operate) (fixed towbar)	52 kg

Notes

1) Reference conditions for engine performance to ISO 3046-1.

2) See derating diagram below or consult the factory for other conditions.

3) At reference conditions unless otherwise stated.

4) Rating definition (ISO 8528-1):
LTP: Limited Time Power is the maximum electrical power which a generating set is capable of delivering (at variable load), in the event of a utility power failure (for up to 500 hours per year of which a maximum of 300 hours is continuous running). No overload is permitted on these ratings. The alternator is peak continuous rated (as defined in ISO 8528-3) at 27°C.
PRP: Prime Power is the maximum power available during a variable power sequence, which may be run for an unlimited number of hours per year, between stated maintenance intervals and under the stated ambient conditions. A 10% overload is permitted for 1 hour in 12 hours. The permissible average power output during a 24h period shall not exceed the stated load factor of 100%.

5) Specific mass fuel used: 0.86 kg/l.

50 Hz - Derating Table (in %, 100% is declared power in "Performance Data")

Height (m)	Temperature (°C)										
	0	**5**	**10**	**15**	**20**	**25**	**30**	**35**	**40**	**45**	**50**
0	100	100	100	100	100	100	95	95	95	95	90
500	100	100	100	100	95	95	95	95	95	90	90
1000	95	95	95	95	95	90	90	90	90	85	85
1500	95	90	90	90	90	85	85	85	85	85	80
2000	90	85	85	85	85	80	80	80	80	80	75
2500	80	80	80	80	75	75	75	75	75	70	70
3000	75	75	75	75	70	70	70	70	65	65	65
3500	70	65	65	65	65	65	60	60	60	60	55
4000	60	60	60	60	55	55	55	55	50	50	50

For use of generator outside these conditions, please contact Atlas Copco.

9.2 Average illumination versus distance

9.3 Dimension drawing

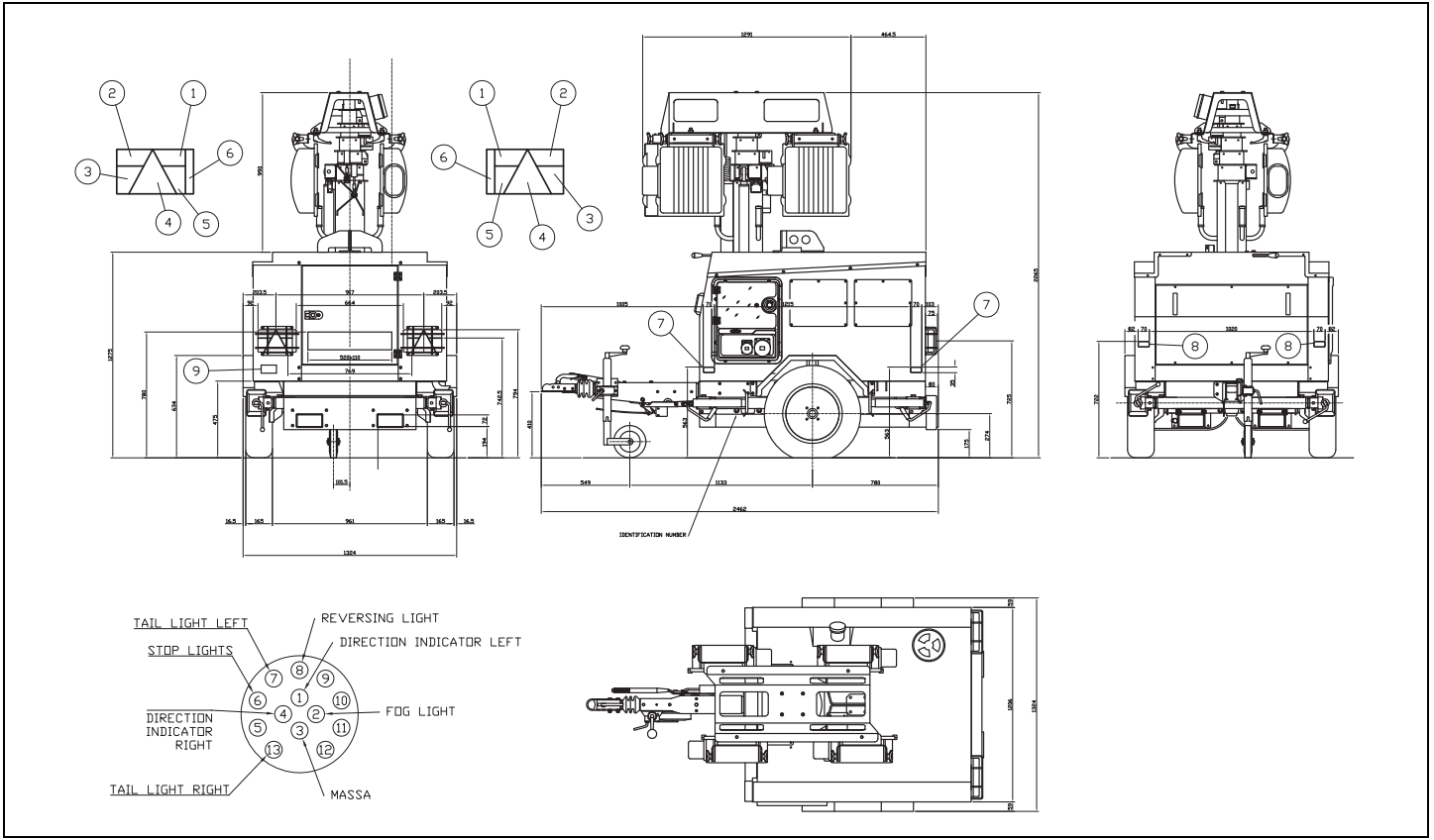

9.4 Conversion list of SI units into British units

1 bar	=	14.504 psi
1 g	=	0.035 oz
1 kg	=	2.205 lbs
1 km/h	=	0.621 mile/h
1 kW	=	1.341 hp (UK and US)
1 l	=	0.264 US gal
1 l	=	0.220 lmp gal (UK)
1 l	=	0.035 cu.ft
1 m	=	3.281 ft
1 mm	=	0.039 in
1 m^3/min	=	35.315 cfm
1 mbar	=	0.401 in wc
1 N	=	0.225 lbf
1 Nm	=	0.738 lbf.ft
$t_{°F}$	=	$32 + (1.8 \times t_{°C})$
$t_{°C}$	=	$(t_{°F} - 32)/1.8$

A temperature difference of 1°C = a temperature difference of 1.8°F.

9.5 Dataplate

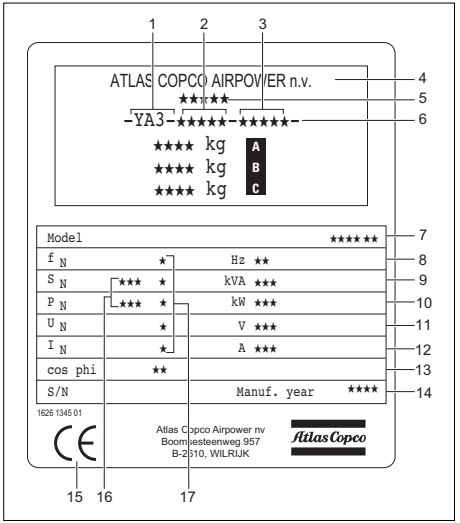

A	Maximum permitted total weight of the vehicle
B	Maximum permitted axle load
C	Maximum permitted load on towing eye
1	Company code
2	Product code
3	Unit serial number
4	Name of manufacturer
5	EEC or national type approved number
6	Vehicle identification number
7	Model number
8	Frequency
9	Apparant power - PRP
10	Active power - PRP
11	Nominal rated voltage
12	Nominal rated current
13	Power factor
14	S/N - Manufacturing year
15	EEC mark in accordance witt Machine Directive 89/392E
16	Mode of operation
17	Winding connections

Circuit diagrams

A1-23591B2
Power circuit

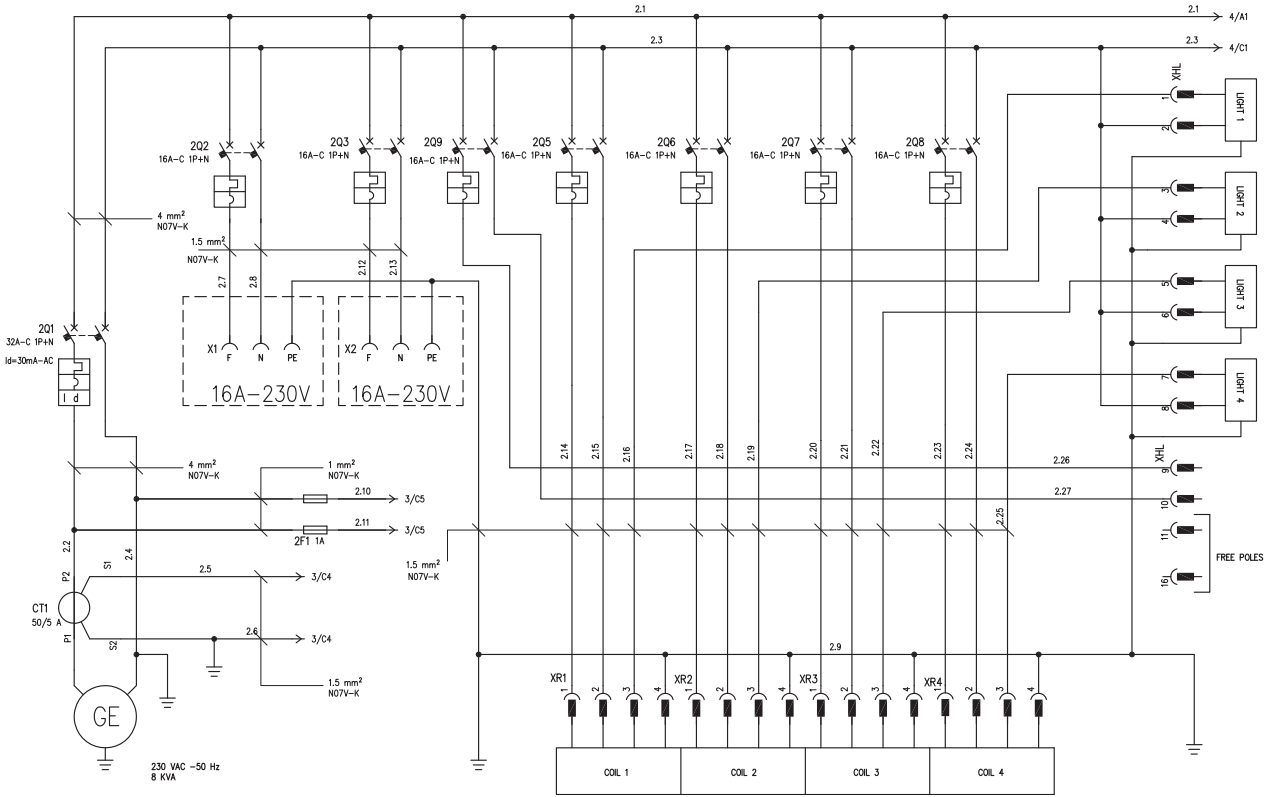

A1-23591B2
Power circuit

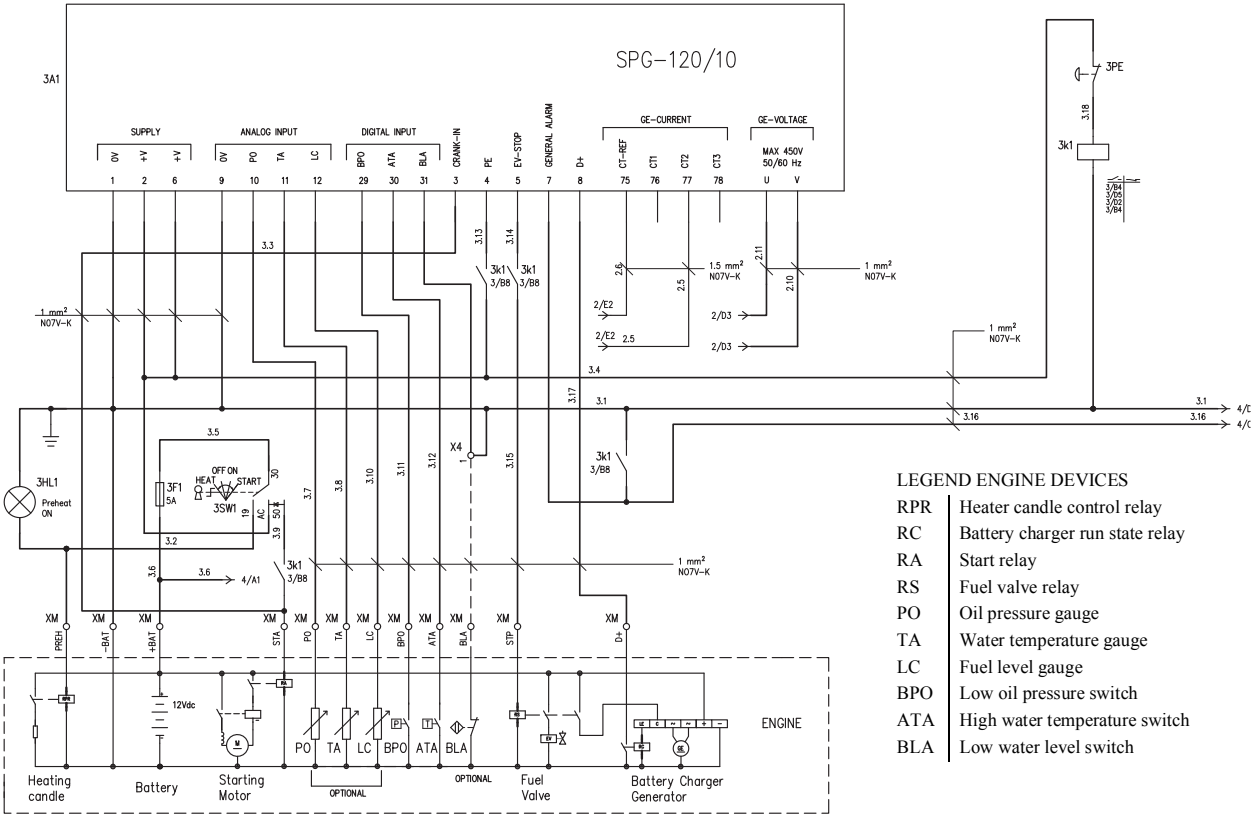

LEGEND ENGINE DEVICES

RPR	Heater candle control relay
RC	Battery charger run state relay
RA	Start relay
RS	Fuel valve relay
PO	Oil pressure gauge
TA	Water temperature gauge
LC	Fuel level gauge
BPO	Low oil pressure switch
ATA	High water temperature switch
BLA	Low water level switch

A1-23591B2
Control circuit

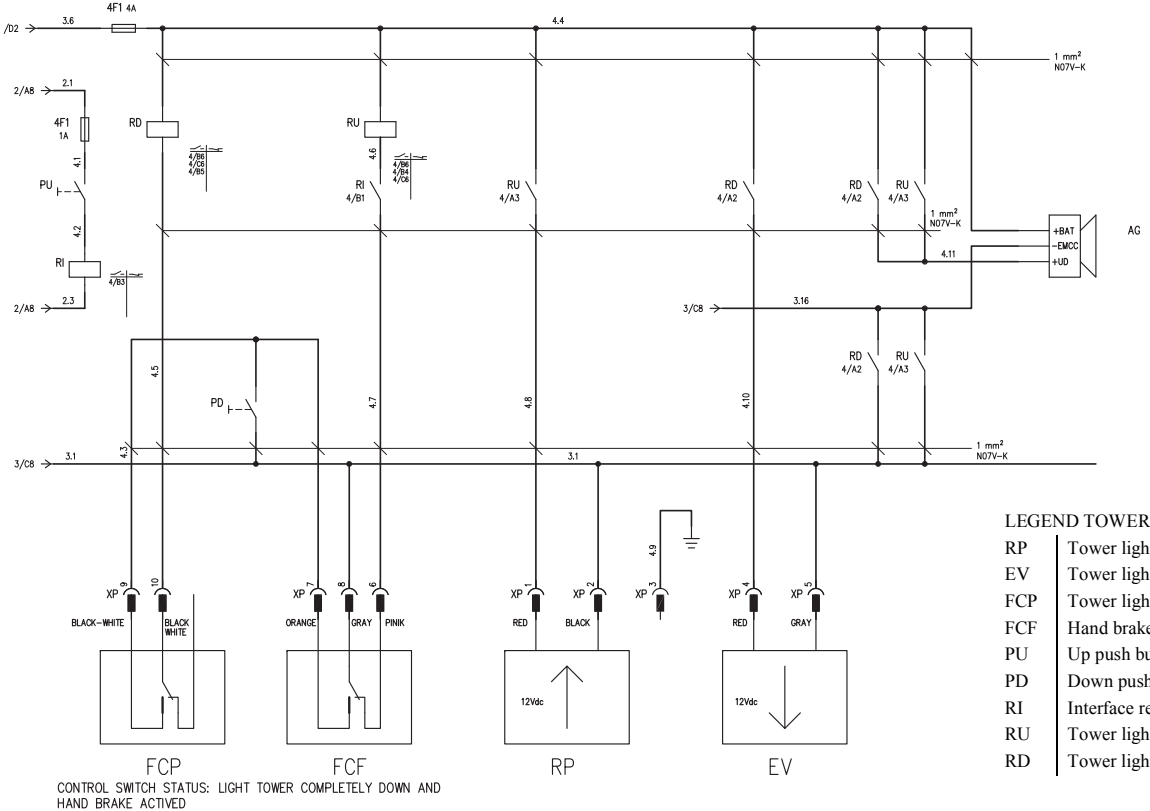

CONTROL SWITCH STATUS: LIGHT TOWER COMPLETELY DOWN AND HAND BRAKE ACTIVED

LEGEND TOWER LIGHT CONTROL

RP	Tower light up actuator
EV	Tower light down actuator
FCP	Tower light down position switch
FCF	Hand brake position switch
PU	Up push button command
PD	Down push button command
RI	Interface relay
RU	Tower light up relay
RD	Tower light down relay

A1-23591B2
Control circuit

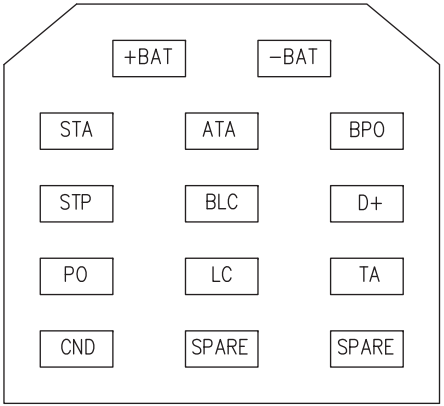

XM− STANDARD ENGINE CONNECTOR

LEGEND TOWER LIGHT CONTROL

+BAT	Red 4mm	Battery positive pole
-BAT	Grey 4 mm	Battery negative pole
D+	Green 1.5 mm	D+ signal for battery charger
STA	Black 2.5 mm	Engine start command
STP	Yellow 1.5 mm	Fuel valve command
BPO	White 1.5 mm	Low oil pressure
ATA	Azure 1.5 mm	High water temperature
BLC	Orange 1.5 mm	Low fuel level
LC	Violet 1.5 mm	Fuel level gauge
PO	White/black 1.5 mm	Oil pressure gauge
TA	White/blue 1.5 mm	Water temperature gauge
CND	Brown 1.5 mm	Preheat candle command

A1-23591B2
Trolley connector

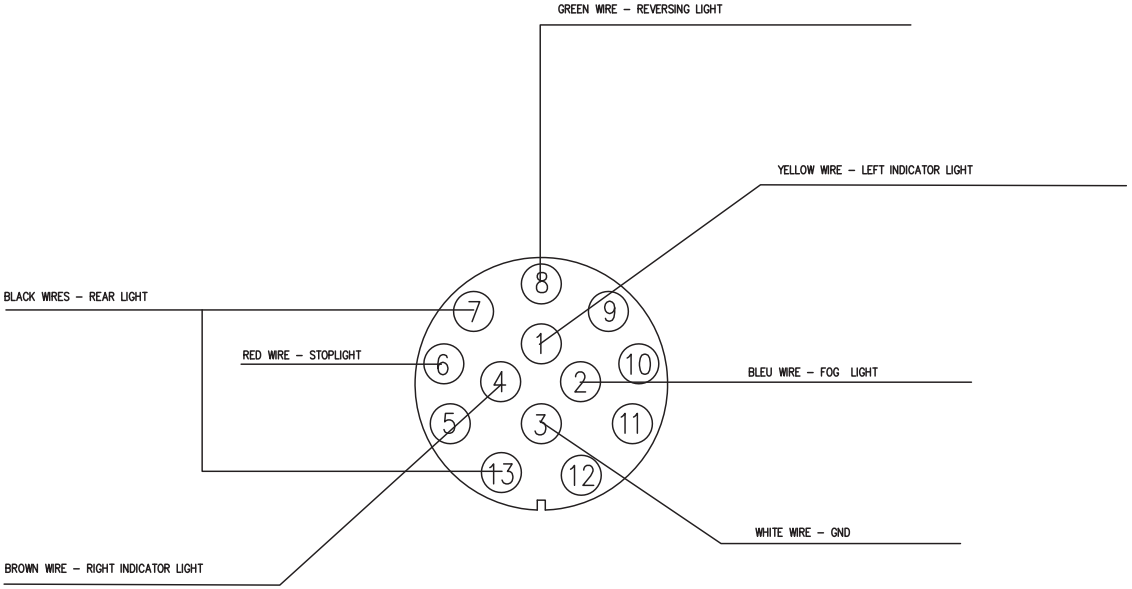

A1-23581B2
Lamps

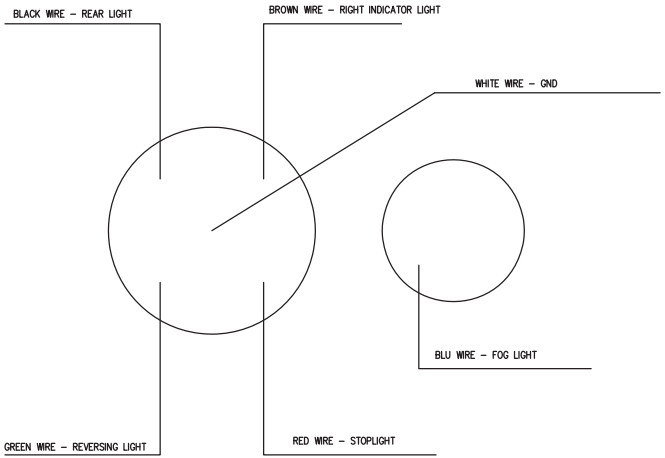

RIGHT LAMP

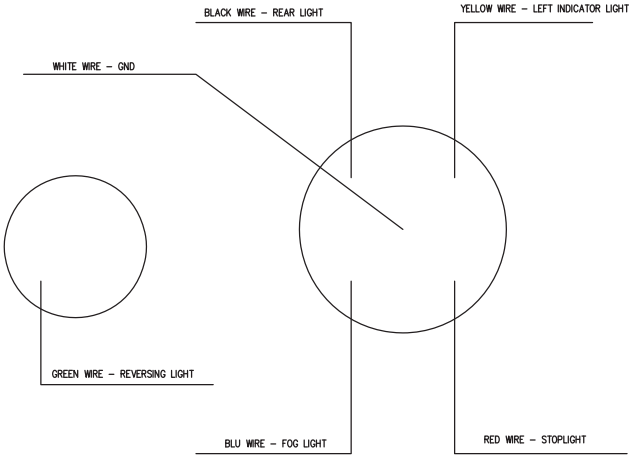

LEFT LAMP

Parts list

SERVICE PAK

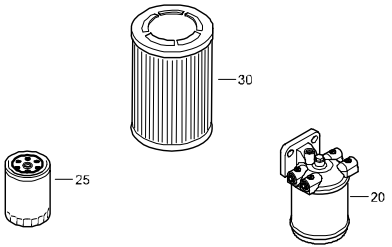

REF	PART NUMBER	DESIGNATION	QTY
-	2912 6409 05	SERVICE PAK 500 H QLT H40	
20	-	FUEL FILTER	1
25	-	OIL FILTER	1
30	-	AIR FILTER	1

ENGINE AND ALTERNATOR ASSEMBLY - STANDARD - SINCRO ALTERNATOR

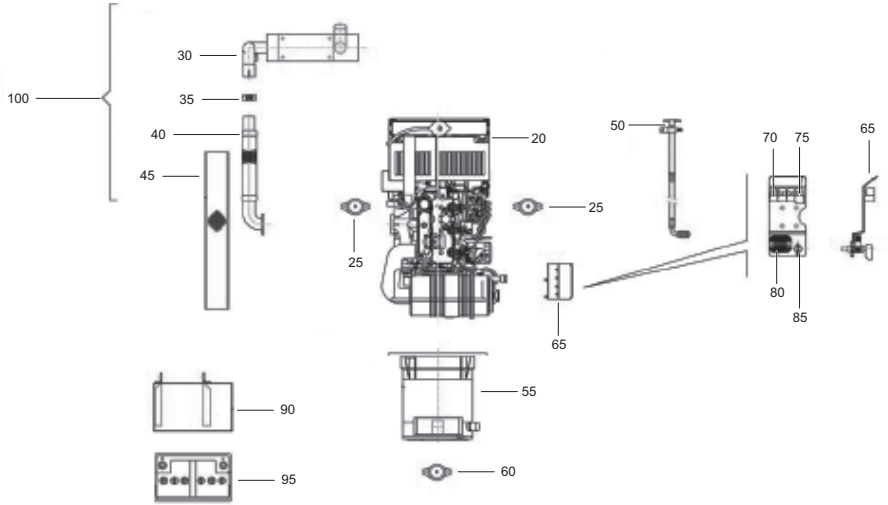

REF	PART NUMBER	DESIGNATION	QTY
20	3002 5000 00	ENGINE	1
	2914 8348 00	FUEL FILTER	1
	2914 8349 00	OIL FILTER	1
	2914 9857 00	AIR FILTER	1
25	3002 5002 00	PAD ANTI VIBR.	2
30	3002 5004 00	SILENCER	1
35	3002 5005 00	CLAMP	1
40	3002 5006 00	PIPE EXHAUST	1
45	3002 5007 00	INSULATION THERMAL	1
50	3002 5013 00	PUMP	1
55	3002 5001 80	ALTERNATOR (SINCRO)	1
	3002 5224 00	AVR	1
	3002 5225 00	DIODE BRIDGE	1
	3002 5226 00	EXCITER STATOR	1
	3002 5227 00	EXCITER ROTOR	1
	3002 5228 00	FAN	1
	3002 5229 00	COUPLING HUB	1
	3002 5230 00	COUPLING DISCS	1
60	3002 5003 00	PAD ANTI VIBR.	1
65	3002 5008 00	SUPPORT	1
70	3002 5009 00	RELAY	1
75	3002 5010 00	RELAY	1
80	3002 5011 00	REGULATOR	1
85	3002 5012 00	SWITCH	1
90	3002 5014 00	SUPPORT	1
95	3002 5015 00	BATTERY	1
100	2914 8900 00	SILENCER KIT	1

UNDERCARRIAGE - STANDARD

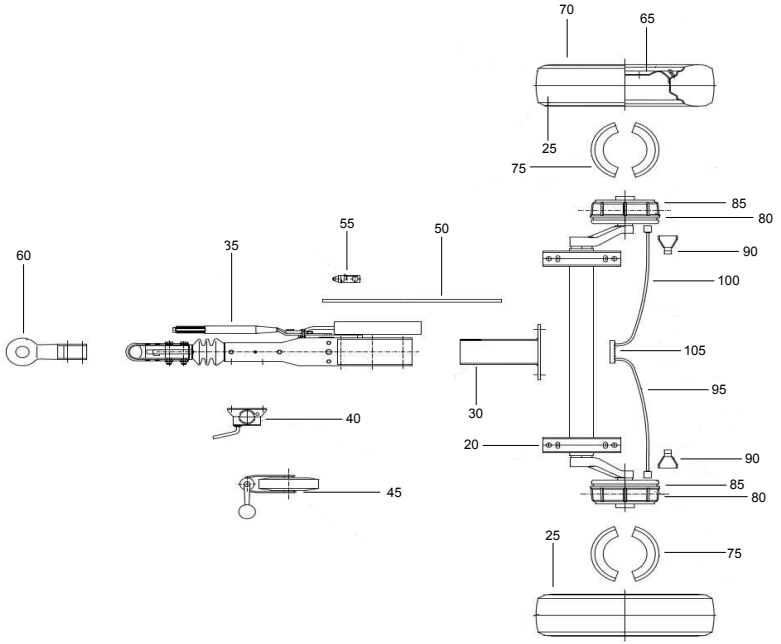

REF	PART NUMBER	DESIGNATION	QTY
20	3002 5016 00	AXLE	1
25	3002 5017 00	TYRE ASSY	2
30	3002 5018 00	SUPPORT	1
35	3002 5019 00	TOWBAR	1
40	3002 5020 00	CLAMP	1
45	3002 5021 00	JOCKEY WHEEL	1
50	3002 5022 00	ROD	1
55	3002 5023 00	SWITCH	1
60	3002 5024 00	EYE TOWING	1
65	2914 8903 00	RIM	2
70	2914 8904 00	TYRE	2
75	2914 8905 00	BRAKE PAD	4
80	2914 8906 00	BEARING 30204	2
85	2914 8907 00	BEARING 30206	2
90	2914 8908 00	BRAKE CABLE COVER/LOCK	2
95	2914 8909 00	LEFT BRAKE CABLE	1
100	2914 8910 00	RIGHT BRAKE CABLE	1
105	2914 8911 00	ROCKER LEVER BRAKE CABLE	1

BRAKE DRUM ASSEMBLY - STANDARD

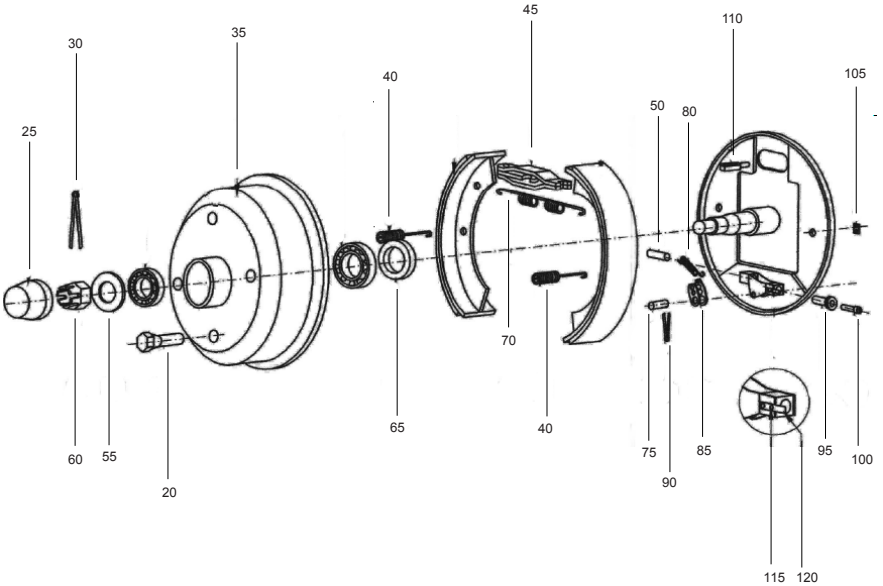

REF	PART NUMBER	DESIGNATION	QTY
20	2914 8926 00	WHEEL BOLT	4
25	2914 8927 00	HUB CAP	1
30	2914 8928 00	SPLIT PIN	1
35	2914 8929 00	BRAKE DRUM	1
40	2914 8930 00	SPRING	2
45	2914 8931 00	LEVER	2
50	2914 8932 00	CAP	1
55	2914 8933 00	WASHER	1
60	2914 8934 00	SLOTTED HEX NUT	1
65	2914 8935 00	OIL RETAINER	1
70	2914 8936 00	BRAKE SHOE SPRING	2
75	2914 8937 00	PIN	1
80	2914 8938 00	SPRING	1
85	2914 8939 00	BLOCK	1
90	2914 8940 00	SPLIT PIN	1
95	2914 8941 00	ADJUSTMENT NUT	1
100	2914 8942 00	THREADED CAP	1
105	2914 8943 00	ANCHOR PLATE	2
110	2914 8944 00	EYE	1
115	2914 8945 00	RIVET	2
120	2914 8946 00	SAFETY STRIP	1

ADJUSTABLE TOWBAR - STANDARD

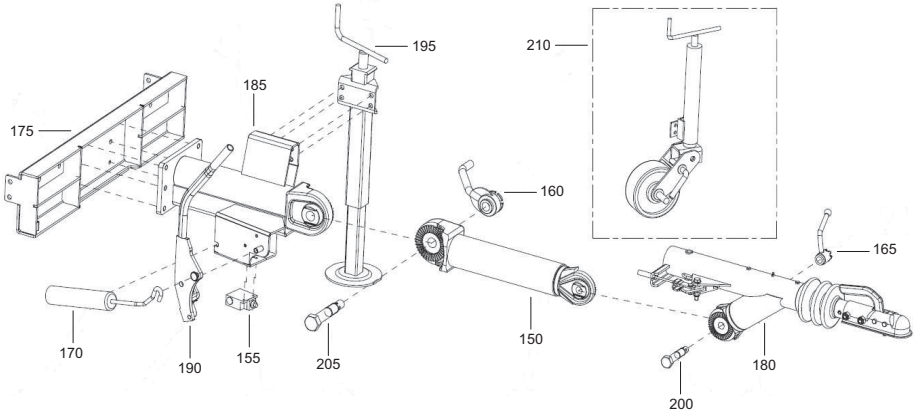

REF	PART NUMBER	DESIGNATION	QTY
150	3002 5271 00	MIDDLE ARM	1
155	3002 5253 00	SWITCH	1
160	3002 5254 00	MIDDLE ARM BLOCK FIFTH WHEEL	1
165	3002 5255 00	BALL COUPLING BLOCK FIFTH WHEEL	1
170	3002 5256 00	PRELOADED SPRING	1
175	3002 5257 00	REINFORCED FRAME	1
180	3002 5258 00	BALL COUPLING GROUP	1
185	3002 5259 00	TOWBAR'S FIRST ELEMENT	1
190	3002 5260 00	HANDBREAK LEVER	1
195	3002 5261 00	STABILIZING FOOT, WITH CRANK	1
200	3002 5262 00	SCREW BALL COUPLING GROUP	1
205	3002 5263 00	SCREW MIDDLE ARM	1
210	2914 8925 00	JOCKEY WHEEL - ADJS. TOWBAR	1

ADJUSTABLE TOWBAR ASSEMBLY - STANDARD

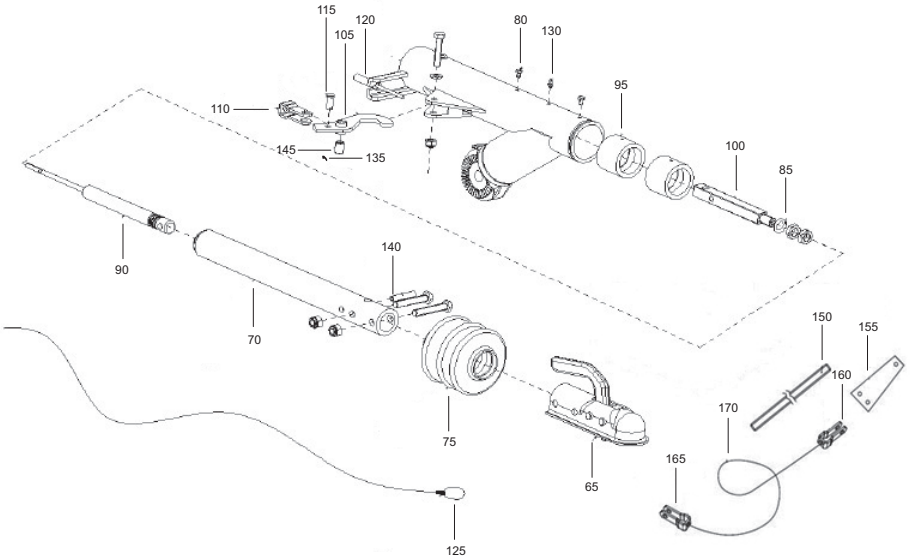

REF	PART NUMBER	DESIGNATION	QTY
5	3002 5269 00	MS2 HEAD - COMPLETE	1
70	3002 5238 00	PERFORATED ROD - COMPLETE	1
75	3002 5239 00	RUBBER BELLOWS	1
80	3002 5240 00	M6 X 10 8.8 UNI 5931 SCREW	1
85	3002 5241 00	O- RING 50X5	1
90	3002 5270 00	2022.010 VIBRATION DAMPER	1
95	3002 5242 00	ERTALON BUSHING	1
100	3002 5243 00	ROD EXTENSION	1
105	3002 5244 00	SPEED REDUCTION LEVER, COMPLETE	1
110	3002 5245 00	FORK WITH DIAM.10 PERFORATION	1
115	3002 5246 00	PERFORATED FLAT-HEAD PIN	1
120	3002 5247 00	CABLE FOR BALL COUPLING	1
125	3002 5248 00	TEARING CABLE	1
130	3002 5249 00	STRAIGHT LUBRICATOR M6X1	1
135	3002 5250 00	D.2,8X30 UNI 1336 SPLIT PIN	1
140	3002 5251 00	D.10X50 UNI1707 ELASTIC PIN	1
145	3002 5252 00	LEVER ROTATION BUSHING	1
150	2914 8920 00	CONNECTING ROD	1
155	2914 8921 00	TRAPEZE	1
160	2914 8922 00	FORK WITH HOLE	1
165	2914 8923 00	FORK WITH SLOT HOLE	1
170	2914 8924 00	CABLE	1

FRAME AND PANELS - STANDARD

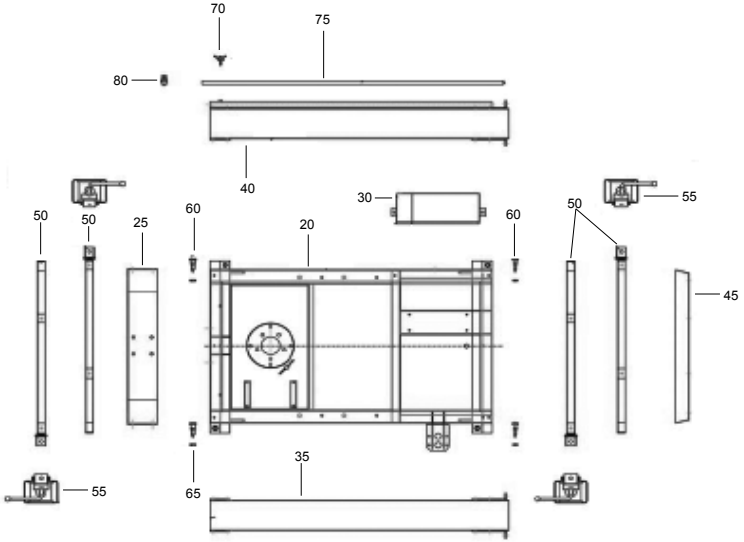

REF	PART NUMBER	DESIGNATION	QTY
20	3002 5025 00	FRAME	1
25	3002 5026 00	SUPPORT	1
30	3002 5027 00	TANK	1
35	3002 5028 00	ASSEMBLY	1
40	3002 5029 00	ASSEMBLY	1
45	3002 5030 00	BUMPER	1
50	3002 5031 00	BAR	4
55	3002 5032 00	FOOT	4
60	3002 5033 00	LOCK SCREW	4
65	3002 5034 00	NUT	1
70	3002 5035 00	SCREW WING	1
75	3002 5036 00	ROD	1
80	3002 5037 00	CLIP	1

BODYWORK - STANDARD

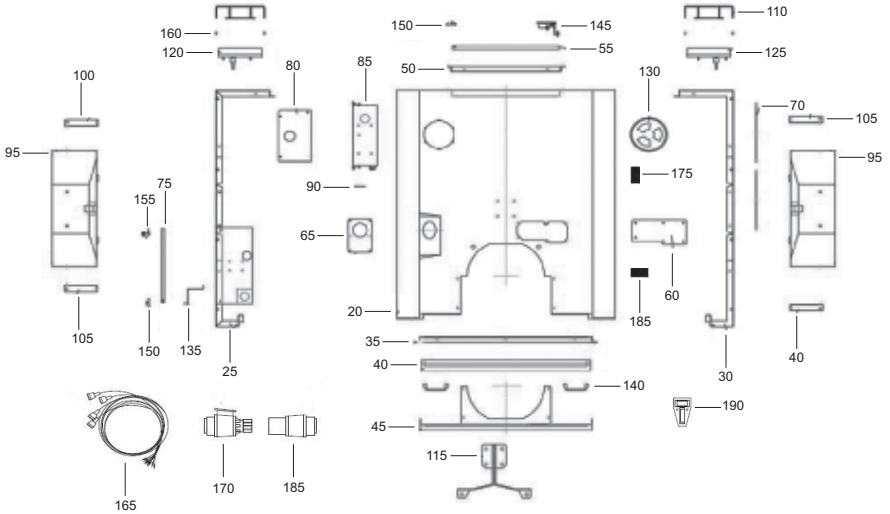

REF	PART NUMBER	DESIGNATION	QTY
20	3002 5038 00	ROOF PANEL	1
25	3002 5039 00	PANEL	1
30	3002 5040 00	PANEL	1
35	3002 5041 00	BAR	1
40	3002 5042 00	PANEL	1
45	3002 5043 00	PANEL	1
50	3002 5044 00	BAR	1
55	3002 5045 00	DOOR	1
60	3002 5046 00	PLATE	1
65	3002 5047 00	FLANGE	1
70	3002 5048 00	COVER	1
75	3002 5049 00	DOOR	1
80	3002 5050 00	FLANGE	1
85	3002 5051 00	DUCT	1
90	3002 5052 00	FLANGE	1
95	3002 5053 00	MUDGUARD	2
100	3002 5054 00	HOLDER	1
105	3002 5055 00	HOLDER	1
110	3002 5056 00	PROTECTION	2
115	3002 5057 00	EYE	1
120	3002 5058 00	LIGHT	1
125	3002 5059 00	LIGHT	1
130	3002 5060 00	COVER	1
135	3002 5061 00	HOLDER	1
140	3002 5062 00	HANDLE	2
145	3002 5063 00	LOCK	1
150	3002 5064 00	HINGE	4
155	3002 5065 00	LOCK	1
160	3002 5066 00	CAP	8
165	3002 5232 00	ROAD SIGNALIZATION WIRING HARNESS (CABLING)	1
170	2914 8912 00	PLUG	1
175	2914 8913 00	ORANGE REFLECTOR	4
180	2914 8914 00	WHITE REFLECTOR	2
185	2914 8916 00	ROAD LIGHT PLUG	1
190	2914 9893 00	LEVEL INDICATOR	1

FUEL TANK ASSEMBLY - STANDARD

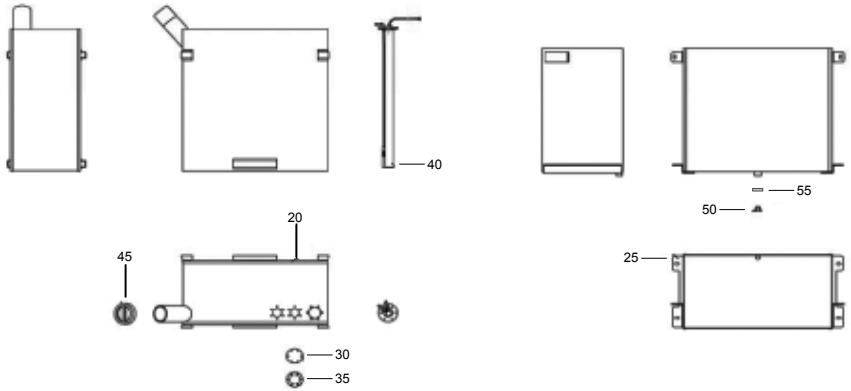

REF	PART NUMBER	DESIGNATION	QTY
20	3002 5067 00	TANK FUEL	1
25	3002 5068 00	FLANGE	1
30	3002 5069 00	FLANGE	1
35	3002 5070 00	WASHER	1
40	3002 5071 00	SENSOR LEVEL	1
45	3002 5072 00	FUEL CAP	1
50	3002 5073 00	CAP	1
55	3002 5074 00	WASHER	1

SUPPORT FOR TOWER COLUMN AND FRAME - STANDARD

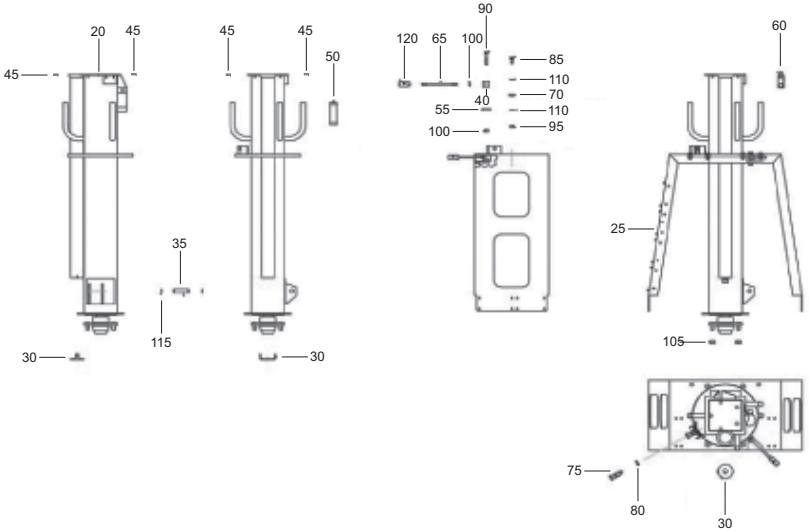

REF	PART NUMBER	DESIGNATION	QTY
-	3002 5075 80	MAST SUPPORT	1
20	3002 5075 00	SUPPORT	1
25	3002 5076 00	SUPPORT	1
30	3002 5077 00	PLATE	1
35	3002 5078 00	SLEEVE	1
40	3002 5079 00	ARRESTER	1
45	3002 5080 00	SPACER	1
50	3002 5081 00	HANDGRIP	3
55	3002 5082 00	SPACER	1
60	3002 5083 00	SWITCH	1
65	3002 5084 00	ROD	1
70	3002 5085 00	BEARING	6
75	3002 5086 00	PIN	1
80	3002 5087 00	BOLT	1
85	3002 5088 00	SCREW	1
90	3002 5089 00	SCREW	1
95	3002 5090 00	NUT	1
100	3002 5091 00	NUT	1
105	3002 5092 00	NUT	1
110	3002 5093 00	WASHER	1
115	3002 5094 00	WASHER LOCK	1
120	3002 5095 00	HANDLE	1

TOWER - FIRST ELEMENT - STANDARD

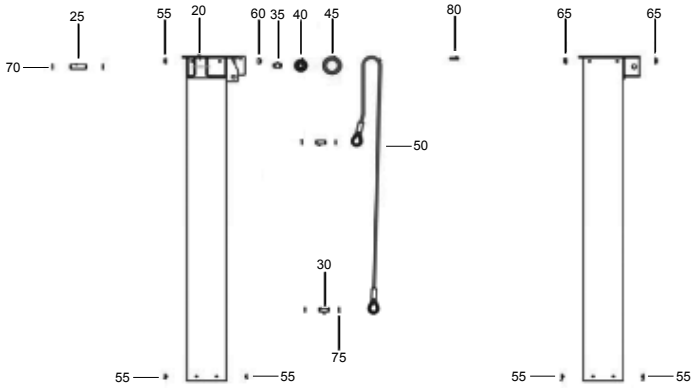

REF	PART NUMBER	DESIGNATION	QTY
20	3002 5096 00	ELEMENT	1
25	3002 5097 00	PIN	1
30	3002 5098 00	PIN	4
35	3002 5099 00	PIN	6
40	3002 5100 00	BEARING	6
45	3002 5101 00	PULLEY	6
50	3002 5102 00	CABLE	1
55	3002 5103 00	BUFFER	20
60	3002 5104 00	BUFFER	14
65	3002 5105 00	BUFFER	8
70	3002 5106 00	WASHER LOCK	2
75	3002 5107 00	WASHER LOCK	2
80	3002 5108 00	PIN	1

TOWER - SECOND ELEMENT - STANDARD

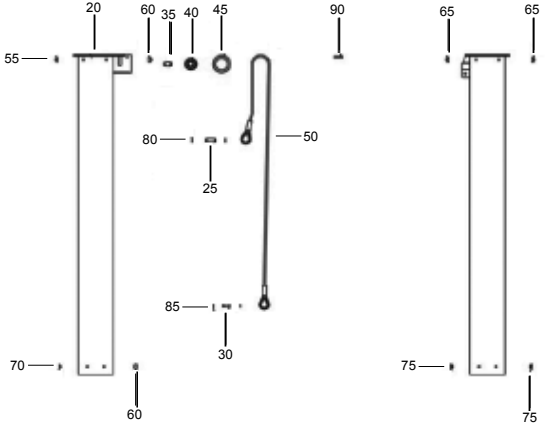

REF	PART NUMBER	DESIGNATION	QTY
20	3002 5109 00	ELEMENT	1
25	3002 5110 00	PIN	1
30	3002 5111 00	PIN	1
35	3002 5112 00	PIN	1
40	3002 5113 00	BEARING	1
45	3002 5114 00	PULLEY	1
50	3002 5115 00	CABLE	1
55	3002 5116 00	BUFFER	1
60	3002 5117 00	BUFFER	1
65	3002 5118 00	BUFFER	2
70	3002 5119 00	BUFFER	1
75	3002 5120 00	BUFFER	2
80	3002 5121 00	WASHER LOCK	2
85	3002 5122 00	WASHER LOCK	2
90	3002 5123 00	PIN	1

TOWER - THIRD ELEMENT - STANDARD

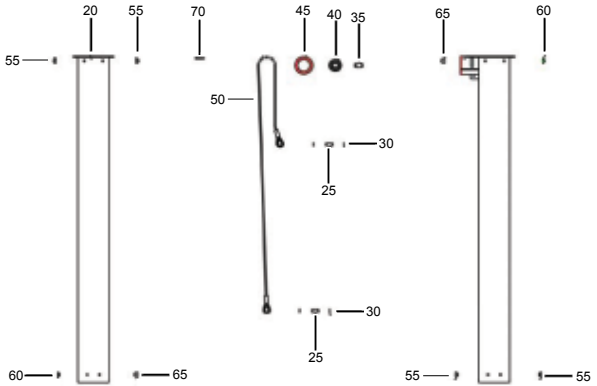

REF	PART NUMBER	DESIGNATION	QTY
20	3002 5124 00	ELEMENT	1
25	3002 5125 00	PIN	2
30	3002 5126 00	PIN	2
35	3002 5127 00	PIN	1
40	3002 5128 00	BEARING	1
45	3002 5129 00	PULLEY	1
50	3002 5130 00	CABLE	1
55	3002 5131 00	BUFFER	4
60	3002 5132 00	BUFFER	2
65	3002 5133 00	BUFFER	2
70	3002 5134 00	WASHER LOCK	1

TOWER - FOURTH ELEMENT - STANDARD

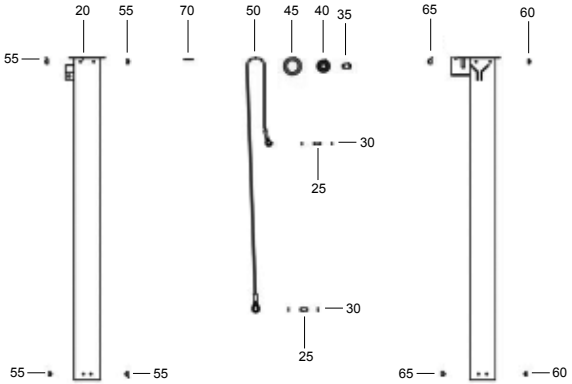

REF	PART NUMBER	DESIGNATION	QTY
20	3002 5135 00	ELEMENT	1
25	3002 5136 00	PIN	2
30	3002 5137 00	PIN	2
35	3002 5138 00	PIN	1
40	3002 5139 00	BEARING	1
45	3002 5140 00	PULLEY	1
50	3002 5141 00	CABLE	1
55	3002 5142 00	BUFFER	4
60	3002 5143 00	BUFFER	2
65	3002 5144 00	BUFFER	2
70	3002 5145 00	ASSEMBLY	1

TOWER - FIFTH ELEMENT - STANDARD

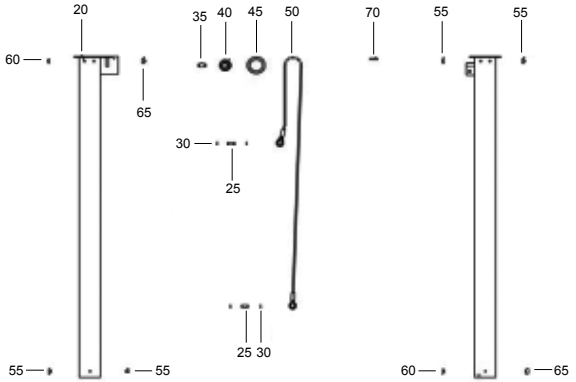

REF	PART NUMBER	DESIGNATION	QTY
20	3002 5146 00	ELEMENT	1
25	3002 5147 00	CABLE	2
30	3002 5148 00	WASHER LOCK	2
35	3002 5149 00	PIN	1
40	3002 5150 00	BEARING	1
45	3002 5151 00	PULLEY	1
50	3002 5152 00	CABLE	1
55	3002 5153 00	BUFFER	4
60	3002 5154 00	BUFFER	2
65	3002 5155 00	BUFFER	2
70	3002 5156 00	PIN	1

TOWER - SIXTH ELEMENT - STANDARD

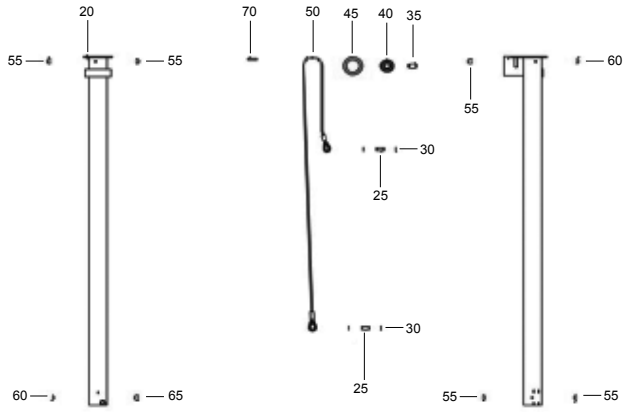

REF	PART NUMBER	DESIGNATION	QTY
20	3002 5157 00	ELEMENT	1
25	3002 5158 00	CABLE	2
30	3002 5159 00	WASHER LOCK	2
35	3002 5160 00	PIN	1
40	3002 5161 00	BEARING	1
45	3002 5162 00	PULLEY	1
50	3002 5163 00	CABLE	1
55	3002 5164 00	BUFFER	4
60	3002 5165 00	BUFFER	2
65	3002 5166 00	BUFFER	2
70	3002 5167 00	PIN	1

TOWER - SEVENTH ELEMENT - STANDARD

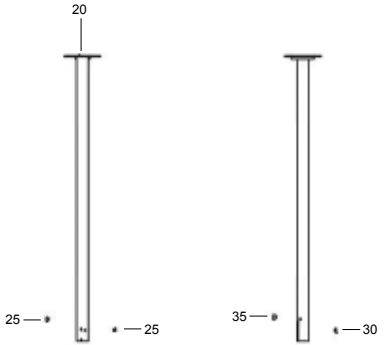

REF	PART NUMBER	DESIGNATION	QTY
20	3002 5168 00	ELEMENT	1
25	3002 5169 00	BUFFER	2
30	3002 5170 00	BUFFER	1
35	3002 5171 00	BUFFER	1

ROAD SIGNALISATION - STANDARD

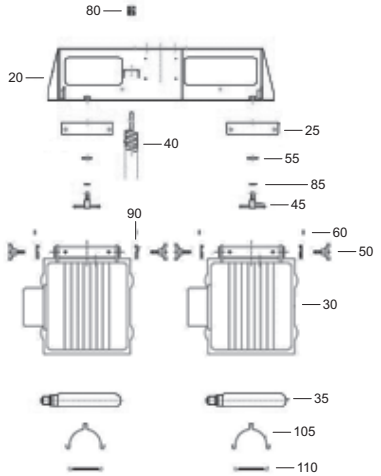

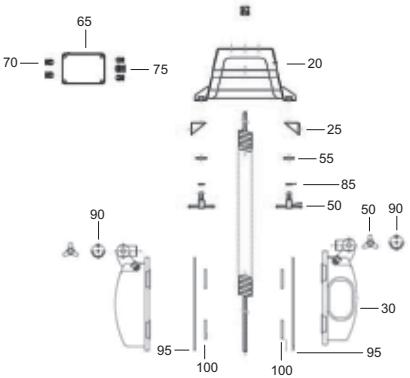

REF	PART NUMBER	DESIGNATION	QTY
20	3002 5172 00	SUPPORT	1
25	3002 5173 00	SUPPORT	4
30	3002 5174 00	LAMP ASSY	1
35	3002 5175 00	LAMP	1
40	3002 5176 00	CABLE/WIRE	1
45	3002 5177 00	BOLT	1
50	3002 5178 00	HANDGRIP	1
55	3002 5179 00	WASHER	1
60	3002 5180 00	WASHER	1
65	3002 5181 00	BOX	1
70	3002 5182 00	CABLE GLAND	1
75	3002 5183 00	CABLE GLAND	1
80	3002 5184 00	CABLE GLAND	1
85	3002 5185 00	PLUG	1
90	3002 5233 00	SETTING RING (SETTING RING)	8
95	3002 5234 00	GLASS (PROJECTOR GLASS)	4
100	3002 5235 00	SEAL (GLASS SEAL KIT)	4
105	2914 8917 00	LAMP HOLDER SPRING	1
110	2914 8918 00	LAMP HOLDER SUPPORT	1

HYDRAULIC SYSTEM - STANDARD

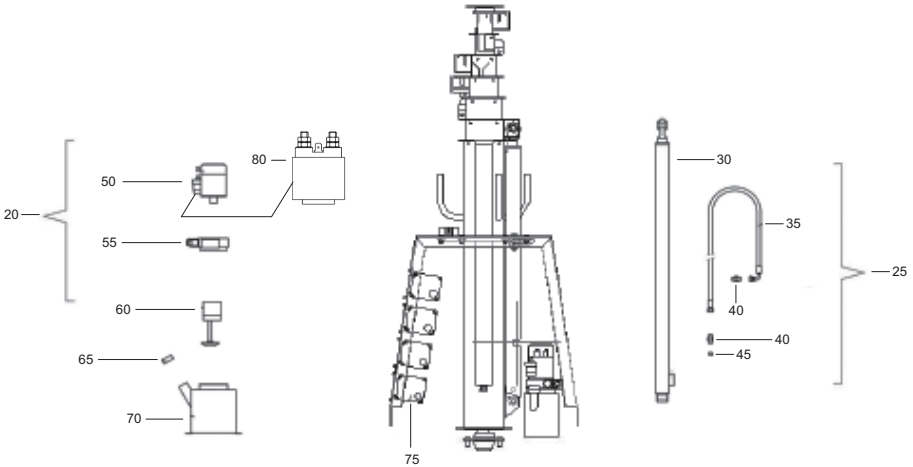

REF	PART NUMBER	DESIGNATION	QTY
20	3002 5186 00	HYDRAULIC PUMP	1
25	3002 5187 00	KIT	1
30	3002 5188 00	CYLINDER	1
35	3002 5189 00	PIPE	1
40	3002 5190 00	NIPPLE	2
45	3002 5191 00	VALVE	1
50	3002 5192 00	MOTOR	1
55	3002 5193 00	GEARBOX	1
60	3002 5194 00	PUMP	1
65	3002 5195 00	CAP	1
70	3002 5196 00	TANK OIL	1
75	3002 5197 00	BALLAST	4
80	2914 9894 00	RELAY HYDRAULIC PUMP	1

ELECTRIC PANEL - STANDARD

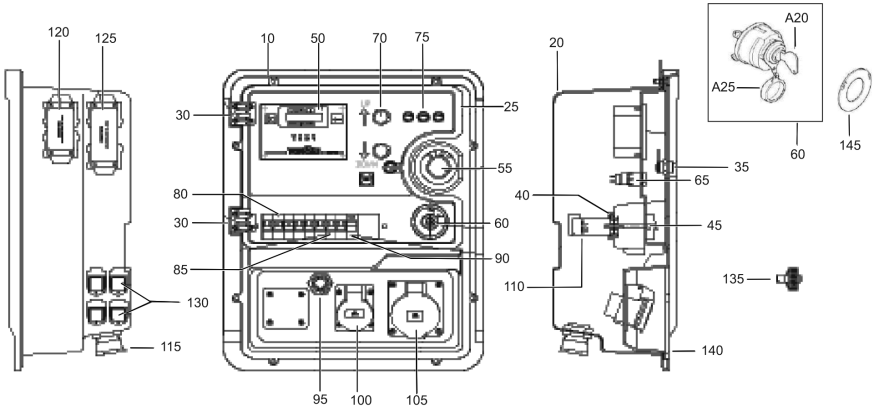

REF	PART NUMBER	DESIGNATION	QTY
10	3002 5198 80	FRONT PANEL	1
20	3002 5199 00	BOX	1
25	3002 5200 00	DOOR	1
30	3002 5201 00	HINGE	2
35	3002 5202 00	LOCK	1
40	3002 5203 00	GUIDE	2
45	3002 5204 00	SCREW	2
50	3002 5205 00	CONTROL UNIT	1
55	3002 5206 00	EMERGENCY STOP	1
60	3002 5207 00	SWITCH	1
A20	3002 5236 00	START SWITCH KEY	1
A25	3002 5237 00	START SWITCH COVER	1
65	3002 5208 00	INDICATOR	1
70	3002 5209 00	BUTTON	2
75	3002 5210 00	HOLDER FUSE	3
80	3002 5211 00	BREAKER	6
85	3002 5212 00	BREAKER	2
90	3002 5213 00	BREAKER	1
95	3002 5214 00	ALARM	1
100	3002 5215 00	SOCKET 16 A	1
105	3002 5216 00	SOCKET 32 A	1
110	3002 5217 00	TRANSFORMER	1
115	3002 5218 00	CABLE GLAND	2
120	3002 5219 00	CONNECTOR	1
125	3002 5220 00	CONNECTOR	1
130	3002 5221 00	CONNECTOR	4
135	3002 5222 00	DOOR KEY	1
140	3002 5223 00	GASKET	AR
145	2914 8919 00	WASHER PERKINS KEY SWITCH	1

STICKER - STANDARD

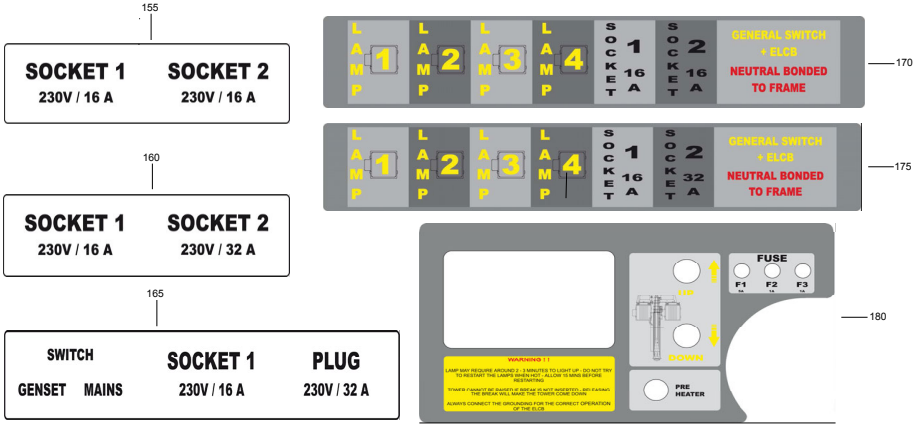

REF	PART NUMBER	DESIGNATION	QTY
155	3002 5264 00	STICKER SOCKET 1 (230V/16A) +SOCKET 2 (230V/16A)	1
160	3002 5265 00	"STICKER SOCKET 1 (230V/16A) + SOCKET 2 (230V/32A)	3
165	3002 5266 00	"STICKER SWITCH GENSET/ MAINS +SOCKET 1 (230V/16A) + PLUG	
		(230V/32A)	1
170	3002 5267 00	"STICKER LAMP1/2/3/4 + SOCKET	1
		(16A) + SOCKET 2 (16A) + GENERAL SWITCH	1
175	3002 5268 00	"STICKER LAMP1/2/3/4 + SOCKET	1
		(16A) + SOCKET 2 (32A) + GENERAL SWITCH	1
180	3002 5272 00	"STICKER GENERAL INSTRUCTIONSUP/DOWN	1

MARKINGS - STANDARD

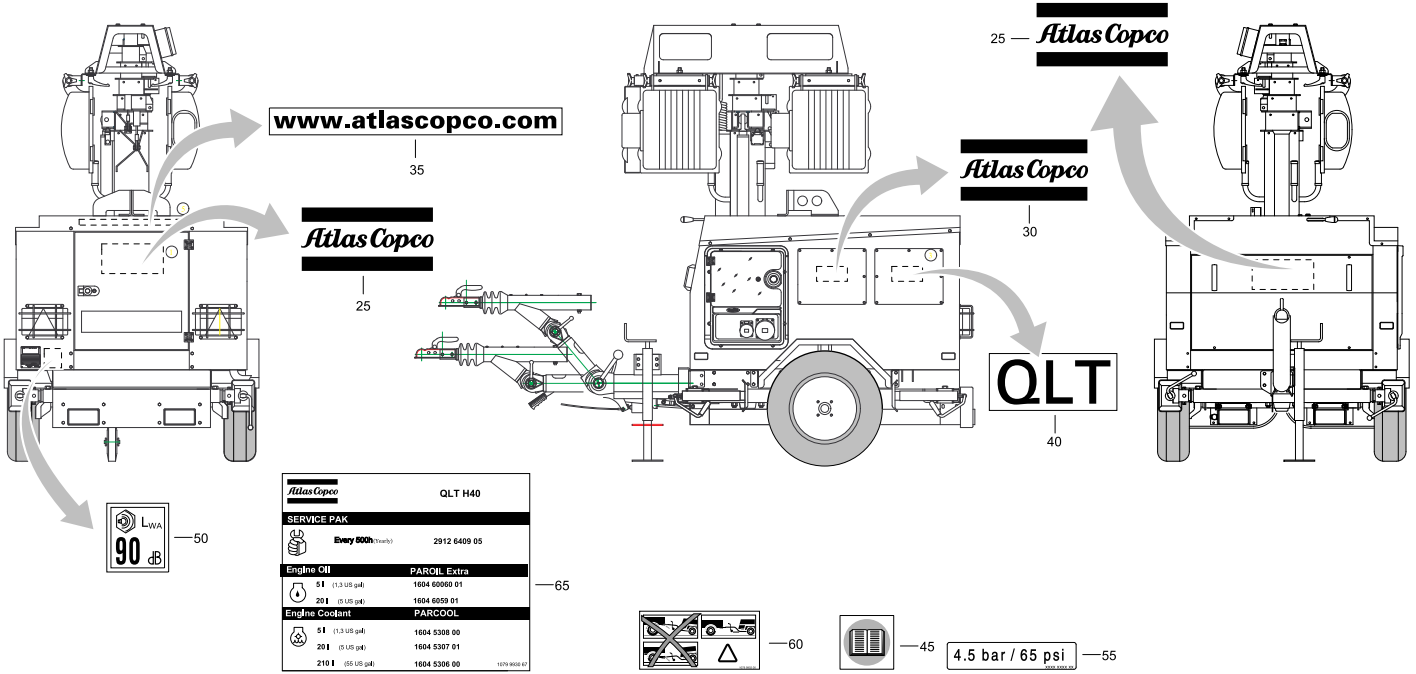

REF	PART NUMBER	DESIGNATION	QTY
25	0690 1132 00	HOUSE MARK	2
30	0690 1116 00	HOUSE MARK	2
35	1079 9921 03	INFORMATION LABEL	1
40	1626 5650 00	LABEL	2
45	1079 9922 07	INFORMATION LABEL	1
50	1604 3317 07	LABEL NOISE	1
55	1079 9917 97	INFORMATION LABEL	2
60	1079 9902 00	WARNING LABEL	1
65	1079 9930 67	LABEL	1

ENGINE AND ALTERNATOR ASSEMBLY - MECC ALTE ALTERNATOR - OPTIONS

REF	PART NUMBER	DESIGNATION	QTY
55	2914 8901 00	ALTERNATOR (MECC ALTE)	1
60	2914 8902 00	PAD ANTI VIBR.	1

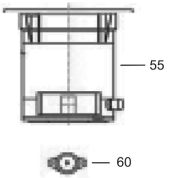

TOWING EYES - DIN EYE, ITA EYE, NATO EYE - OPTIONS

DIN EYE

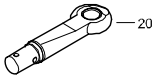

REF	PART NUMBER	DESIGNATION	QTY
	DIN EYE		
20	1626 5914 00	TOWING EYE	1

1611 7410 82/01

ITA EYE

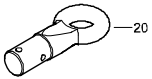

	ITA EYE		
20	1626 5678 00	TOWING EYE	1

1611 7407 82/00

NATO EYE

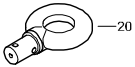

	NATO EYE		
20	1626 5942 00	TOWING EYE NATO	1

1611 7411 82/01

TOWING EYES - BALL COUPLING EYE, BNA EYE, FRENCH EYE - OPTIONS

BALL COUPLING EYE

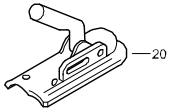

BNA EYE

FRENCH EYE

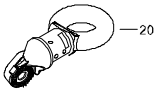

REF	PART NUMBER	DESIGNATION	QTY
	BALL COUPLING EYE		
20	1626 5914 00	TOWING EYE	1
			1611 7406 82/01
	BNA EYE		
20	1626 5678 00	TOWING EYE	1
			1611 7413 82/01
	FRENCH EYE		
20	1626 5942 00	TOWING EYE	1
			1611 7412 82/01

Following documents are provided with this unit:

- Test Certificate
- EC Declaration of Conformity:

Atlas Copco

EC DECLARATION OF CONFORMITY

We, Atlas Copco Airpower n.v., declare under our sole responsibility, that the product
Machine name : **Power generator (< 400 kW)**
Commercial name :
Serial number :

Which falls under the provisions of article 12.2 of the EC Directive 2006/42/EC on the approximation of the laws of the Member States relating to machinery, is in conformity with the relevant Essential Health and Safety Requirements of this directive.

The machinery complies also with the requirements of the following directives and their amendments as indicated.

Directive on the approximation of laws of the Member States relating to		Harmonized and/or Technical Standards used	Attmnt
Machinery safety	2006/42/EC	EN ISO 12100-1 EN ISO 12100-2 EN 1012-1	
Electromagnetic compatibility	2004/108/EC	EN 61000-6-2 EN 61000-6-4	
Low voltage equipment	2006/95/EC	EN 60034 EN 60204-1 EN 60439	
Outdoor noise emission	2000/14/EC	ISO 3744	x

The harmonized and the technical standards used are identified in the attachments hereafter
Atlas Copco Airpower n.v. is authorized to compile the technical file

	Conformity of the specification to the Directives	Conformity of the product to the specification and by implication to the directives
Issued by	Product engineering	Manufacturing
Name		
Signature		
Place , Date		

Form 5009 9600 03
ed. 08, 2010-01-01

Atlas Copco Airpower n.v. A company within the Atlas Copco Group

Postal address
P.O. Box 100
B-2610 Wilrijk-Antwerp
Belgium
www.atlascopco.com

Visitors address
Boomsesteenweg 957
B-2610 Wilrijk-Antwerp
Belgium

Phone: +32 (0)3 870 21 11
Fax: +32 (0)3 870 24 43

Com. Reg. Antwerp 44651
V.A.T. 403.992.231

For info, please contact your local Atlas Copco representative

p. 1(2)

Atlas Copco

www.atlascopco.com

Printed in Belgium 07/2012 - 2954 4960 03